U.S. Department
of Transportation

**National Highway
Traffic Safety
Administration**

NHTSA
People Saving People
http://www.nhtsa.dot.gov

DOT HS 808685
January 1998

Final Report

Development, Evaluation, and Demonstration of a Tractor Trailer Intelligent Communication and Power Link

This document is available to the public from the National Technical Information Service, Springfield, Virginia 22161.

TABLE OF CONTENTS

Page

1. PROGRAM OVERVIEW 2
1.1 OBJECTIVE 3
1.2 TECHNICAL APPROACH 3
1.3 TEAM MEMBERS AND RESPONSIBILITIES 4

2. SYSTEM OVERVIEW 5
2.1 DESIGN SUMMARY 5
2.2 JUSTIFICATION OF DESIGN APPROACH 7
2.3 HARDWARE AND SOFTWARE ARCHITECTURE 8
2.4 COMPATIBILITY WITH EXISTING SYSTEMS 9

3. DETAILED SYSTEM DESCRIPTION 11
3.1 CABLE DESIGN & EMC TESTING 11
3.2 TRACTOR & TRAILER WIRING 12
3.3 PACKAGING 14
3.4 ELECTRONICS 18
3.5 SOFTWARE 22

4. TESTING AND EVALUATION 24
4.1 BOARD TESTING 24
4.2 TRUCKMUX™ FULL VEHICLE RADIATED EMISSION TESTS 24
4.3 ROAD TEST RESULTS 24

5. CONCLUSIONS 27

6. RECOMMENDATIONS 28

7. ACRONYMS 29

8. REFERENCES 30

9. APPENDICES 31
9.1 APPENDIX A ALTERNATIVE APPROACH ASSESSMENTS 31
9.2 APPENDIX B TRAILER WIRING DIAGRAM 36
9.3 APPENDIX C WIRING HARNESS VOLTAGE DROP CALCULATIONS 37

1. PROGRAM OVERVIEW

NHTSA's Office of Crash Avoidance Research conducts and manages research intended to: analyze driver-vehicle interaction; identify specific vehicle design, components, or parameters associated with driver performance errors and resulting collisions; and develop and evaluate vehicle-based collision avoidance countermeasure concepts and devices.

There are approximately 1.6 million truck tractors and 3.6 million trailers in use in the motor carrier industry today. Technology offers a significant potential to improve the productivity of the industry and help reduce the approximately 200,000 crashes in which these vehicles are involved each year. To date, the application of new technology to commercial vehicles has generally been limited to single unit trucks and truck tractors because of constraints inherent in the present combination-unit truck trailer electrical powering and communication system. These constraints are a small number of hard-wired circuits. More circuits or equivalent technology are needed to do more with the trailer.

Traditionally, the US trucking industry equipment needs have been supplied by the truck/tractor manufacturer (supplying the towing unit) and the trailer manufacturer (supplying the cargo space to move goods). The two units are married at the fifth wheel of the power unit and the king-pin of the trailer. Communication and powering between the tractor and trailer consists of supplying power and control from the tractor to the running lights of the trailer through the standard seven-pin electrical connector (six circuits and one ground). One of the primary reasons for lack of technology change is the limited versatility of the standard six-circuit connection between tractors and trailers operating in the US. Observing this, the defense, aerospace, and computer industries have begun to focus on commercial vehicle applications as a potential new market for their advanced technologies to improve safety, efficiency and productivity.

Vehicle/unit locators, vehicle/driver trip loggers, on-board weight measurement and recording systems, vehicle maintenance status monitor/recorder/transmitters, administrative credentials transponders, etc., are envisioned, and in many cases, already being installed on trucks and tractors, resulting in significant operational efficiency benefits. Likewise, side-, rear-, and forward-looking collision avoidance systems, driver performance monitors, anti-lock and electronic braking systems, brake maintenance status monitors, etc., can enhance commercial vehicle operational safety performance.

To date, the application of these developing technologies to commercial vehicles has been limited predominately to the power unit or tractor. There is clearly a need to overcome the inherent constraints presently found in the communicating and powering system between tractors and trailers. These constraints are exacerbated in the case of multi-unit combination tractor/trailers, the vehicle type which will likely have an increased future role in improving the productivity of the motor carrier industry. The ability to install advanced technology which increases productivity and safety may be a key element in making their expanded future use practical and acceptable.

A number of possibilities have been suggested to address this issue, including but not limited to: radio/telemetry communication linkages among units in the combination, communications signal multiplexing, voltage enhancements, wiring system upgrades, additional electrical circuits and/or wiring connector systems, etc. The successful introduction of any or all of these approaches will hinge on whether they can be integrated, and be compatible with existing equipment in the current commercial motor carrier fleet. Clearly, in order for these advances to happen, they must comply with the needs and objectives of the users. A comparative evaluation of these approaches, and fleet demonstrations of the most promising among these, will help foster the implementation of technology in this application.

The National Highway Traffic and Safety Administration (NHTSA) issued a request for proposal (RFP) for development of new approaches to provide communications and power between the tractor and trailer. One of the industry's responses was forming a team comprised of leading members in all key aspects of the tractor/trailer design and manufacturing community. This team formed the Truck Multiplexing (TruckMux™) project.

1.1 Objective

The objective of the project was to develop, evaluate, and demonstrate a universal, intelligent communications and power link between the tractor and trailer for heavy-duty commercial trucks. Basic product requirements—all of which have been verified and demonstrated in the TruckMux program—were:

- Allow any combination of equipped and non-equipped vehicles
- Use the seven-pin umbilical cord and connector
- Perform normal trailer functions
- Be non-intrusive to normal trailer function
- Be transparent to a vehicle operator in both hookup and operation
- Provide for the foreseeable needs of advanced trailer systems

1.2 Technical Approach

Figure 1 TruckMux™ Vehicle

The technical approach (TruckMux™) switches six of the seven wires in the standard connecting cable [Society of Automotive Engineers (SAE) J1067] to two SAE J1939 communications lines and four full-time power lines, leaving one wire for “ground”. The system uses personal computer hardware and power switching in custom modules. SAE J1939 is the new high-speed data communications protocol and physical layer SAE standard. These modules and the necessary power and communications wiring wereinstalled on a Peterbilt 385 tractor and 53-foot Great Dane refrigerated trailer (see Figure 1). To demonstrate the system, Thermo King’s smart reefer, Grote’s LED lighting components and fluorescent lighting, Eaton Axle Brake Division’s ABS, Eaton Corporate Research and Development’s (CoRD) SmartSlider™ and Eaton Side and Rear Collision Warning systems were added to the trailer. The tractor also contained state-of-the-art J1939 components, a Caterpillar C12 engine, Eaton AutoShift™ 10-speed transmission, Eaton VORAD collision warning, and PACCAR in-dash PC/104 display Vehicle Management System (VMS).

1.3 Team Members and Responsibilities

The TruckMux™ team members and their responsibilities were:

ATA Foundation - provided a communication link to the truck user groups, the fleets and individuals who own and operate trucks. Represented their viewpoint during competitive system analysis and tradeoff studies.

Caterpillar - provided a J1939 C-12 engine, expert consultation, and related engine software support.

Eaton Corporation's Axle and Brake Division - Supplied axles and ABS components, ABS/EBS system design, expert consultation, and related wiring design.

Eaton Corporation's Transmission Division - Provided an Eaton J1939, 10-speed AutoShift™ transmission, and expert design consultation.

Eaton VORAD - Provided an EVT-200 Collision Warning System, tractor side collision warning system, and trailer side and rear collision warning system.

Eaton - Corporate Research and Development, Detroit Center - provided overall project management, system design, electronics, software, packaging, build, integration, test, EMC testing. Eaton also supplied to this project advanced hardware from other research projects such as SmartSlider™, an intelligent trailer slider chassis.

Eaton - Corporate Research and Development, Milwaukee Center - provided J1939 consultation and led the competitive analysis.

Great Dane Trailers, Inc. - Provided a Great Dane Classic trailer, model 7011TZ-1A controlled temperature van, system wiring, and manufacturing consultation. The trailer features Eaton axles and ABS brakes, a Hendrickson HT-190 sliding Air Tandem Axle Suspension, Grote wire harnesses and LED lamps, and a Thermo King refrigeration (reefer) unit.

Grote Industries, Inc. - Designed and built the trailer wire harness systems, including both the standard seven-wire harness and the J1939 communications "spine". The trailer includes Grote's LED lighting and near zero RFI fluorescent lighting. Grote was also responsible for the design and build of the special seven-wire shielded and twisted pair coiled cords developed for improved EMC. A trailer model which calculated voltage drops for alternative wiring designs in multiple trailers was developed and verified. Grote was also responsible for graphics design and decals for the truck.

NHTSA/FHWA - Provided funding, project direction and project impetus.

PACCAR Technical Center - Provided a Peterbilt 385 J1939 tractor with a special in-panel display/computer (VMS), system and component expert consultation, tractor wiring design, tractor J1939 communications "spine", and tractor integration.

Thermo King Corp. - Provided a smart reefer unit and expert consultation on ensuring the system was capable of communicating necessary reefer data. Provided expert consultation on reefer fleet needs during competitive analyses.

2. SYSTEM OVERVIEW

2.1 Design Summary

The TruckMux™ system successfully implements an intelligent power and communications link between the tractor and trailer using the standard SAE J560 connector and seven-wire SAE J1067 cable or J2222 coiled cable. J560 specifies the seven-pin receptacle into which the cable inserts. The individual terminals and conductors as specified by these standards are listed in Table 1.

Table 1 SAE J560 and J1067 Wiring Circuits

Terminal Number	Conductor Wire Color	Lamp and Signal Circuits
1	White	Ground return to towing vehicle
2	Black	Clearance, side marker, and identification lamps
3	Yellow	Left turn signal and hazard lamps
4	Red	Stop lamps and antilock devices
5	Green	Right turn signal and hazard lamps
6	Brown	Tail and license plate lamps
7	Blue	Auxiliary

In conventional tractor trailer wiring, the J560 connectors and cable connect several lighting circuits, as shown in Figure 2. In TruckMux™, the same connectors and cable are used for high speed

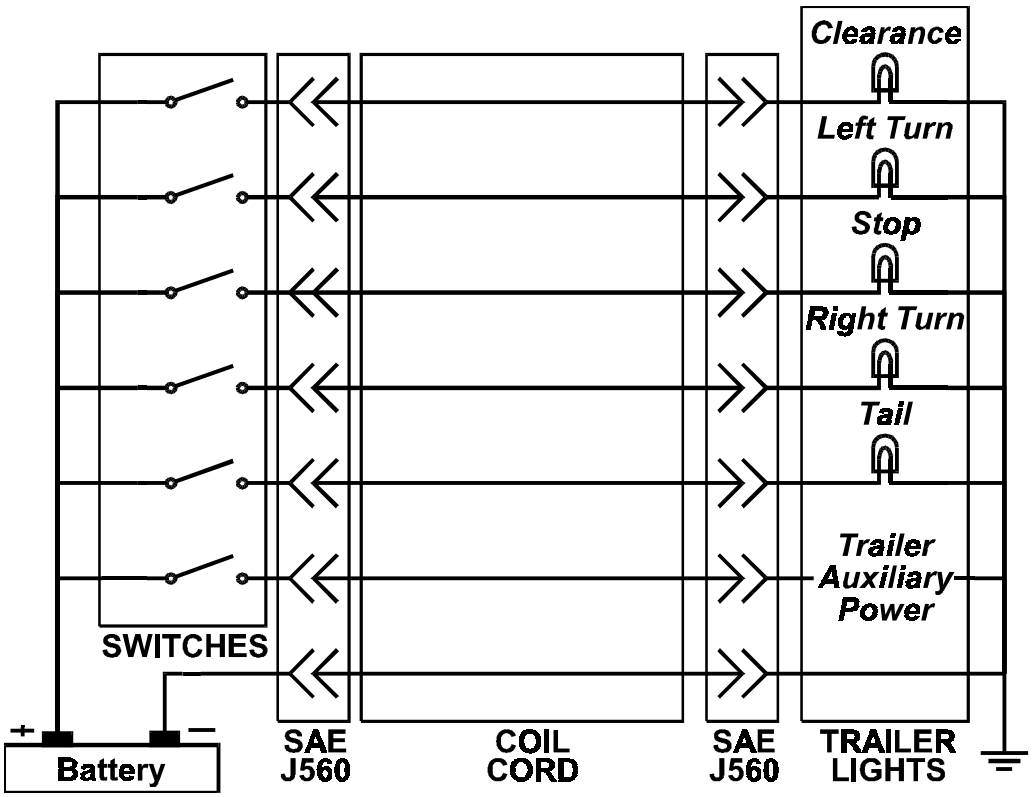

Figure 2 Conventional Tractor/Trailer Wiring

communication links and full-time power, as shown in Figure 3. Two pins carry J1939 communication signals, four pins supply full-time power, and the ground pin retains its function.

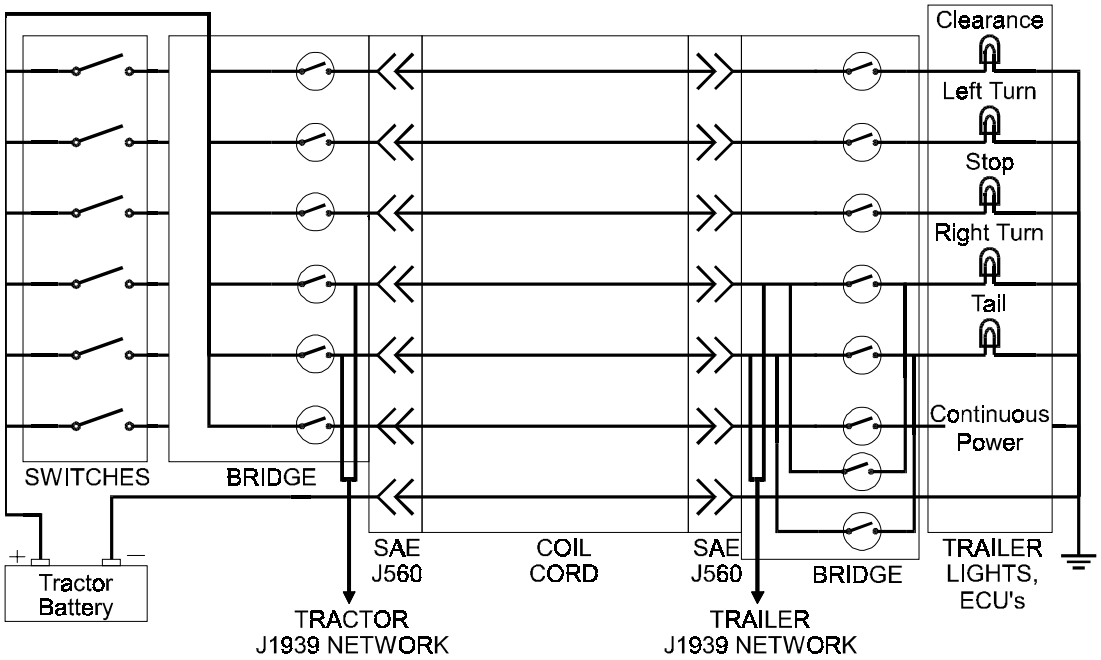

Figure 3 TruckMux™ Tractor/Trailer Wiring

This multiplexed, high speed communication is made possible by electronic bridge modules on both the tractor and trailer. The modules and their communications link provide a backbone upon which a tremendous variety of advanced information and control functions can be built. The following is a partial list of new functions that are enabled by TruckMux™. The items appearing in bold type are implemented in the TruckMux™ prototype system.

- **Advanced lighting multiplex modules**
- Lighting circuit status with memory for lamp outage detection
- **Trailer ID** Credentialling
- Trailer distance log
- Trailer location
- **Trailer air brake reservoir low pressure**
- **ABS warning light in the cab**
- **Trailer parking brake status**
- Brake adjustment clearance
- **Brake status**
- Brake by wire (EBS)
- **Air suspension pressure**
- **Air suspension height**
- Active suspension
- Tractor trailer dynamic control
- Vehicle axle loads
- **Tandem axle load**
- Gross vehicle weight
- Active control of splash and spray
- Bearing status
- **Rear object detection (dock walk or space change)**
- **Side object detection**
- **Trailer Door open**
- Slider position sensing and adjustment
- Tire pressure indication and control
- Cargo status
- **Refrigeration status** and control
- Acoustic trouble detection
- Inventory control products (bar codes)
- Automated doors, loading, unloading
- Rear wheel steering
- Changeable message signs for advertising, etc.
- Smart fifth wheel plus position and adjustment
- King pin lock
- Deceleration lights
- Aerodynamic fairing control
- Landing gear position and adjustment
- Lift axle position and adjustment
- Video for theft deterrent and object detection

A schematic of the system showing the bridge modules, the electronic control units (ECU's) for each function, and their connections to other major components is shown in Figure 4.

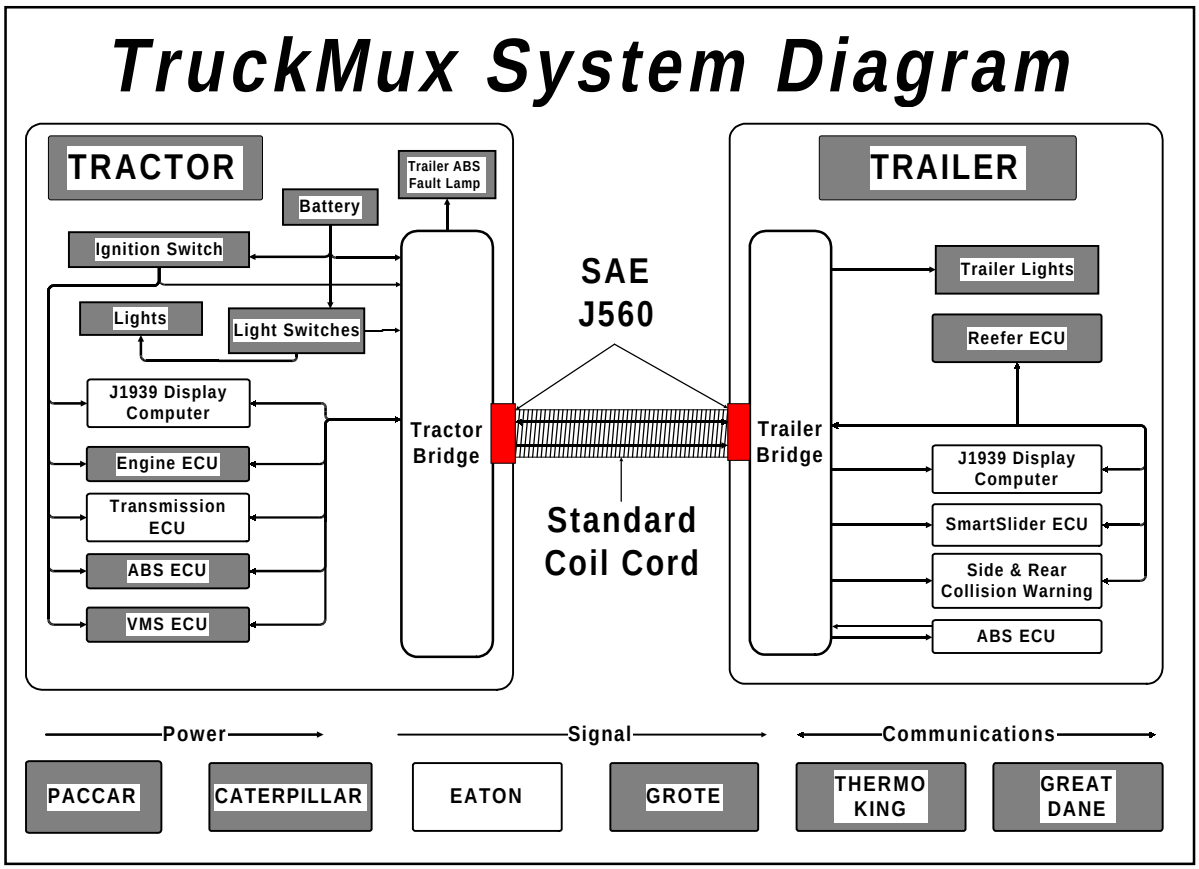

Figure 4 TruckMux™ System Schematic

2.2 Justification of Design Approach

The multiplexed J560 approach to implementing a power and communications link between the tractor and trailer was selected only after careful consideration of this and 11 alternative approaches. A Quality Function Deployment (QFD) analysis was conducted based on weighting factors such as backward compatibility, failure modes and effects, reliability, industry acceptance, and others. A summary of this QFD analysis is given in Appendix A, Alternative Approach Assessment. This analysis showed the multiplexed J560 approach to be superior.

The bridge module approach to implementing the J1939 protocol was also weighed against alternative approaches. (A bridge receives, sends, and analyzes messages.) The bridge was selected as an optimal trade-off among functionality, complexity, and cost. A repeater offers the simplest, lowest cost approach; however, it would not support compatibility with a conventional trailer. A repeater does nothing more than receive a message from a smart sensor, give it a boost, and send it on its way. A router contains all of the functionality of the bridge but adds the capability to route messages selectively down multiple lines. This function may be useful in multiple trailer vehicles to communicate with each trailer individually. A gateway goes one step further and adds the capability to convert between protocols. The added functions of routers and gateways were judged not sufficiently valuable for the TruckMux™ application because of their higher cost and complexity.

A study was done by Grote Industries to determine the voltage drops across the wiring harness on trailers using the multiplexed J560 approach. Their report indicates that this wiring configuration with LED lighting, chassis ground, and adequate voltage from the tractor is acceptable to use as a starting point for a triple trailer configuration. The study also concludes that triple trailers with dedicated and constant ABS power with chassis ground will provide adequate voltage to the ABS modules in triple trailers with incandescent or LED lighting. All configurations are suspect when a ground return harness is used with incandescent lighting loads. Appendix B contains a typical trailer wiring diagram. Appendix C contains a Grote report describing “Wiring Harness Voltage Drop Calculations” in further detail.

2.3 Hardware and Software Architecture

The tractor and trailer bridge modules share a common hardware and software architecture. The computing platform consists of off-the-shelf PC/104 boards containing a 100 MHz 486 microprocessor, analog and digital Input/Output (I/O), and a Softing CANcard. The Softing CANcard is a device used to support the J1939 protocol on a personal computer (PC). PC/104 boards are IBM-PC compatible computer boards designed as ultra-compact stackable modules; this makes them ideally suited to the unique requirements of embedded control applications. A real-time multitasking operating system is used and the program is written in the C programming language. Custom designed logic circuits, output drivers, current sensing, and other circuits are included. Schematics of the tractor bridge and trailer bridge are shown in Figure 5 and Figure 6.

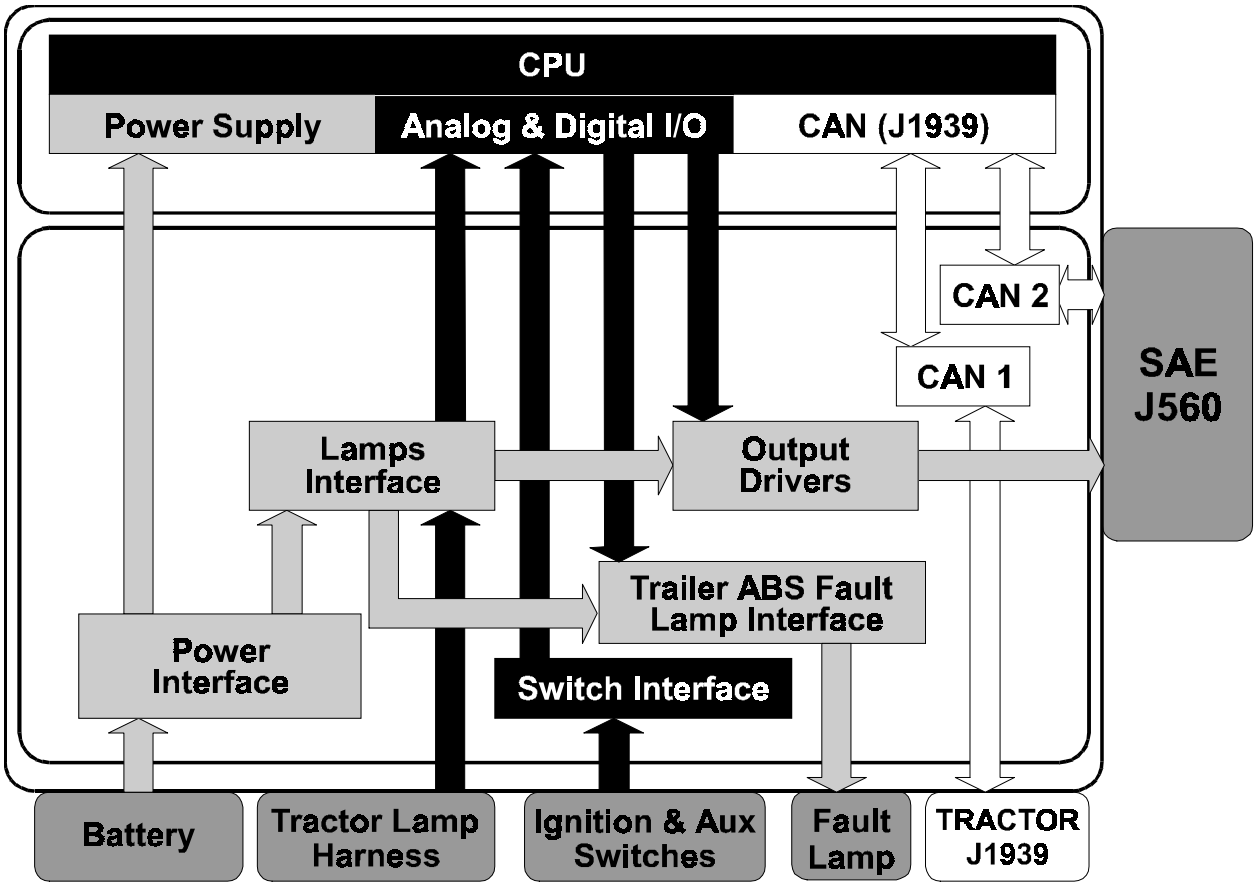

Figure 5 Tractor Bridge Schematic

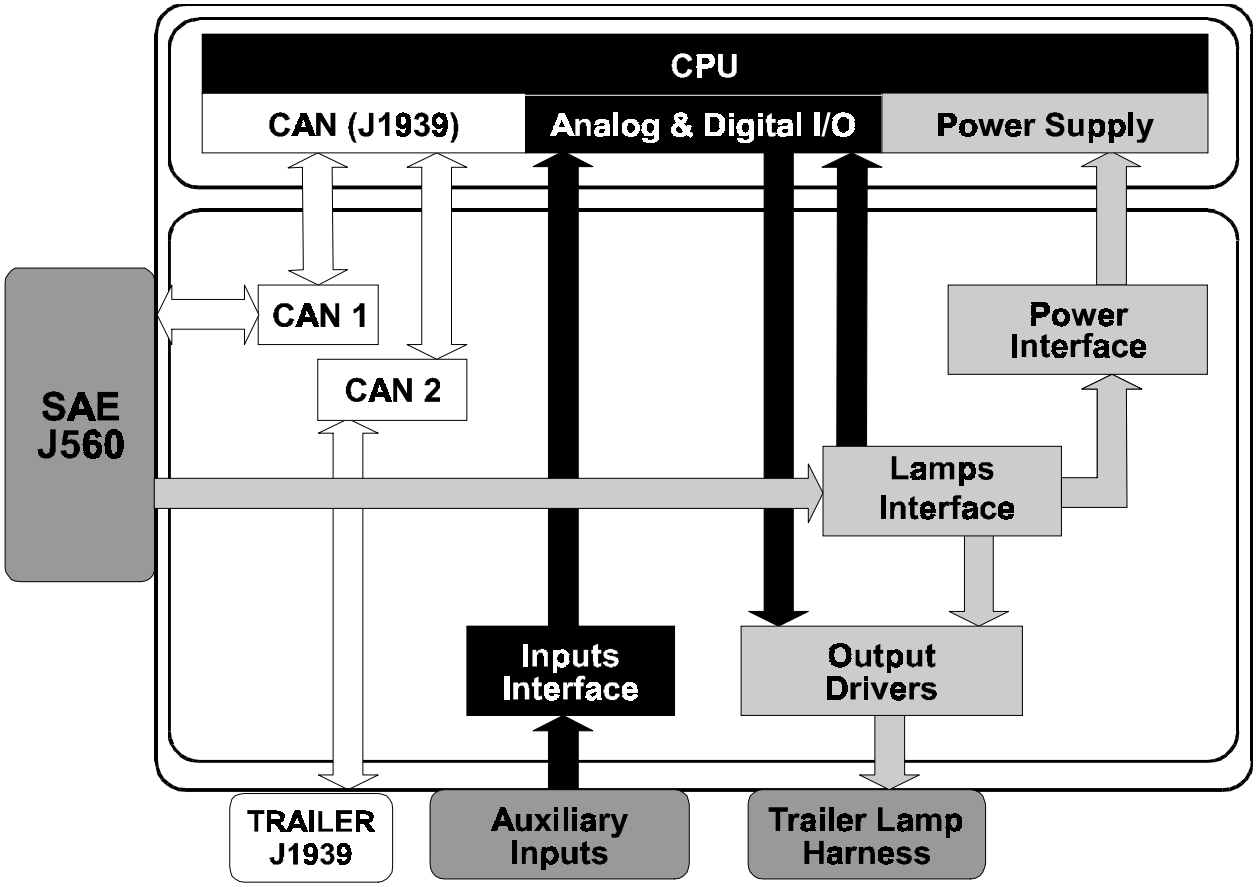

Figure 6 Trailer Bridge Schematic

Considering the tractor bridge, power from the tractor battery flows through the power interface to the computer and through the lamp interface and output drivers to the J560 connector. The tractor lamp harness connects to the lamps interface and computer input boards. The ignition switch state is sensed and the in-dash trailer ABS fault lamp is controlled. Several spare inputs are provided in the bridge. Two CAN chips communicate with the local tractor J1939 network and to the trailer through the J560 connector respectively.

In the trailer bridge, power flows from the J560 connector through the lamps interface to the output drivers and trailer lamps and to the bridge computer. The computer senses digital states within the trailer through the inputs interface. Several spare inputs are provided in the trailer bridge. Two CAN chips communicate with the local trailer J1939 network and to the tractor through the J560 connector respectively.

2.4 Compatibility with Existing Systems

The TruckMux™ system has been designed with two modes of operation to support forward and backward compatibility and to provide robustness to electronics failures. Conventional Mode is the default mode of operation. When in Conventional Mode, the tractor/trailer interface functions as the standard J560 connector. This mode ensures proper operation of standard trailer lighting when either the tractor or trailer has not been converted to TruckMux™. In Smart Mode, the J560 connector acts as the multiplexing interface between the tractor and trailer. This approach allows normal trailer lighting and powering functions to be performed while supporting high speed data communication between the bridges on the tractor and trailer.

Establishing Smart Mode is accomplished automatically; no vehicle operator action is required. With the ignition key off, the tractor bridge is in the default Conventional Mode. When the ignition key is turned on, the tractor bridge starts with outputs in Conventional Mode using the Blue, or auxiliary, circuit powered. This circuit then powers the trailer bridge. The trailer bridge also starts in Conventional Mode, but generates a 20 Hz current pulse on the Blue circuit. At the same time, the trailer bridge “listens” to the Green and Brown circuits for J1939 communications activity. The tractor bridge detects the 20 Hz pulse on the Blue circuit and sends J1939 communications messages on the Green and Brown circuits. When the trailer bridge receives these messages, it stops pulsing the Blue line, sends an acknowledgment, and then both bridges switch to Smart Mode. If either bridge fails to receive these messages within a set period of time, the trailer bridge quits pulsing the Blue circuit and both bridges remain in Conventional Mode. The transition from Conventional to Smart Mode occurs in 100 milliseconds or less and is unnoticeable to the vehicle operator.

3. DETAILED SYSTEM DESCRIPTION

3.1 Cable Design & EMC Testing

At the beginning of the project, one of the first questions which arose was whether or not communications could be reliably transmitted between the tractor and trailer through the seven-wire J1067 cable. This obviously was a critical issue and needed to be resolved early in the project. Because of the J1939 shielding and other strict physical layer requirements, several supplier and design meetings were held to crystallize the approach to be taken. Twelve cable configurations were designed and selected for testing. Emissions from the cable should not interfere with vehicle radios or other electronic systems. In addition, the cable should not be susceptible to interference from such devices which would corrupt the high-speed messages being transmitted through the cable.

3.1.1 Cable Configurations

The following twelve cable configurations were built.

1. Standard seven wire cable (J1067).
2. Standard seven wire cable with tail lamp and right turn, twisted 1 twist per inch.
3. Standard seven wire cable with tail lamp and right turn, twisted 1 twist per 3 inches.
4. Standard seven wire cable with tail lamp and right turn, twisted 1 twist per 6 inches.
5. Standard seven wire cable with tail lamp and right turn, twisted 1 twist per 3 inches and shielded.
6. Standard seven wire cable with additional twisted pair, twisted 1 twist per inch.
7. Standard seven wire cable with additional twisted pair, twisted 1 twist per inch, shielded.
8. Standard seven wire cable with twin axial cable for communications.
9. Standard seven wire cable with 36 gauge spiral shield around twisted pair.
10. Three wire cable with flexible ferrite overcoat as outer layer.
11. Unmodified coiled cable of standard length (J2222).
12. Uncoiled cable of standard length.

All configurations except 6 & 7 were tested. Cables 6 and 7 were a standby approach and merely had two additional wires, making a non-standard nine-wire cable. In addition, susceptibility would be similar to configuration #2. The designs were selected to provide information which then could be projected to other designs should the initial results be unfavorable.

3.1.2 Test Conditions and Setup

SAE J1113/41 and CISPR25A are relevant national and international specifications and were used for the coil cord evaluation (Figure 7).

A two meter length of cable was supported 5 cm above a conductive ground plane, 10 cm from the front and parallel to the edge of the test table.

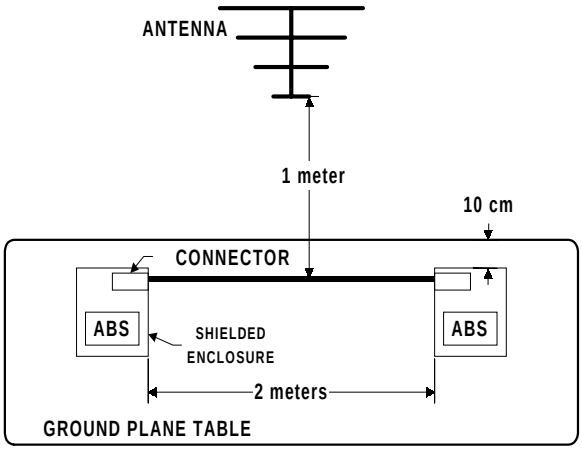

Figure 7 Test Bench Layout (plan view)

3.1.3 Cable Test Results

The cables in Table 2 are listed in order of the lowest rank (best performance) first in terms for RF emission suppression; see SAE paper 962143, “Truck Multiplexer Cable EMC Tests” for a compete discussion of these tests.

3.1.4 Immunity Tests

An attempt was made to measure the immunity characteristics of each cable based upon its performance in the presence of strong electromagnetic fields. This measurement was abandoned when it was determined that the control modules were already so hardened that it was impossible to disrupt their operation with any available signal even with the most undefended cable configuration.

Table 2 Overall Cable Rank

Cable	Rank
10	122
5	134
9	138
11	146
4	148
8	150
2	153
1	156
3	162
12	169
7	No Data
8	No Data

3.1.5 EMC Cable Summary and Conclusion

Table 2 summarizes the results. The tests determined that:

- The uncoiled standard length, standard construction cable produced the strongest RF emissions.
- A Ferrite coated cable produced the most benefit in the form of attenuation of the RF signature.
- Incremental benefits were associated with most cable modifications tested.

3.2 Tractor & Trailer Wiring

3.2.1 Tractor Wiring

To accommodate the TruckMux™ system, additional wiring was added to the tractor. Figure 8 shows the supplemental wiring installed on the tractor.

3.2.1.1 DC Power Wiring

The tractor bridge obtains power through a 105 Amp circuit breaker directly from the tractor batteries. The ignition switch state is sensed by the bridge and the ignition switch supplies full time power on the blue circuit to the bridge through a relay. The lighting harness that normally connects to the J560 connector that feeds the trailer is connected to the tractor bridge. The in-cab Trailer ABS warning light and a TruckMux™ in-dash smart mode lamp are powered by the bridge. The tractor bridge also connects to the tractor local J1939 network through a Deutsch bulkhead connector.

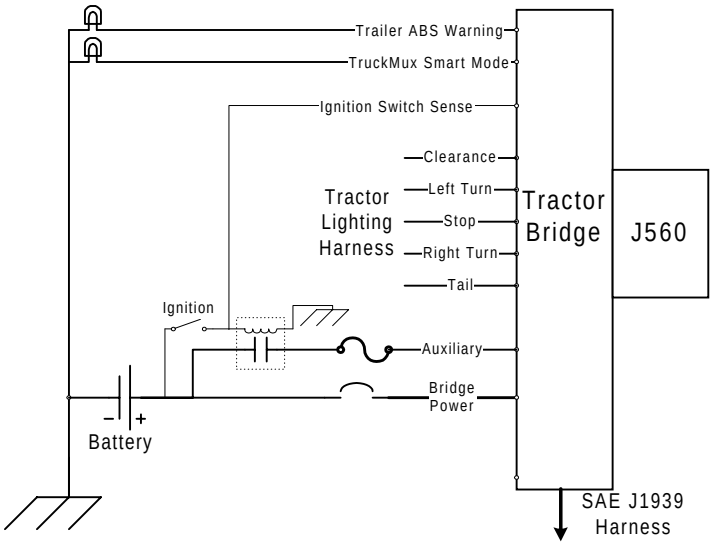

Figure 8 Tractor Supplemental Wiring

3.2.1.2 Communications Wiring

Figure 9 shows all of the tractor J1939 network nodes, connectors, and wiring. The approximate line lengths (in meters) are shown on each of the lines. Two PC's were connected to the network for monitoring and bus loading.

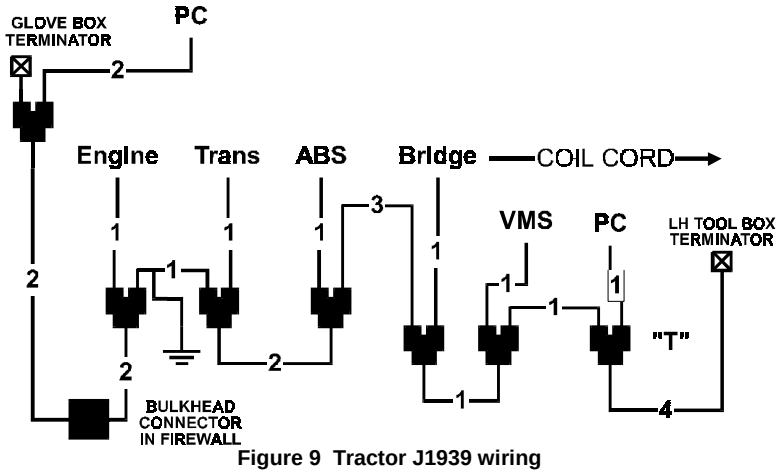

Figure 9 Tractor J1939 wiring

3.2.2 Trailer Wiring

This section describes the supplemental wiring installed on the Smart Trailer to support its special electronic systems. These systems include the SmartSlider™, ABS, and Side and Rear Object Warning System.

3.2.2.1 DC Power Wiring

As manufactured by Great Dane, the trailer came equipped with the standard seven-wire harness that provides connections for all lighting circuits. These seven circuits match the seven connections of the SAE J560 interface. The ground circuit is 8 gage, the stop lamp circuit is 10 gage, while all others are 12 gage. A detailed trailer wiring diagram is contained in Appendix B.

A second four-wire harness was added from the bridge module to the Smart Slider assembly. This harness provides DC power to the slider ECU and ABS ECU. All circuits are 12 gage. One circuit is dedicated to the ABS warning lamp, which also serves as the ABS fault status input to the trailer bridge. The second circuit powering the ABS ECU is used exclusively by the ABS. The third circuit provides power to the SmartSlider™ ECU and the last circuit is ground. This circuit usage supports the NHTSA desire for separate circuits to power the ABS and report ABS fault status.

Additional DC power wiring was added for the Side and Rear Collision Warning Systems ECU and to a connector mounted on the rear of the trailer to power a laptop computer. These power taps are supplied from the trailer bridge ECU output. Twelve gage wire was used.

3.2.2.2 Communication Wiring

Due to the high data rates and sensitive nature of the data to be transmitted on a J1939 network, the SAE has specified a twisted pair, shielded cable, with a 120 ohm nominal impedance. This cabling was added to the tractor and trailer wiring, per J1939/11 specifications regarding how the cable and connectors should be installed. Figure 10 shows the layout for the trailer J1939 communications wiring, the approximate line lengths (in meters) are shown on each of the lines.

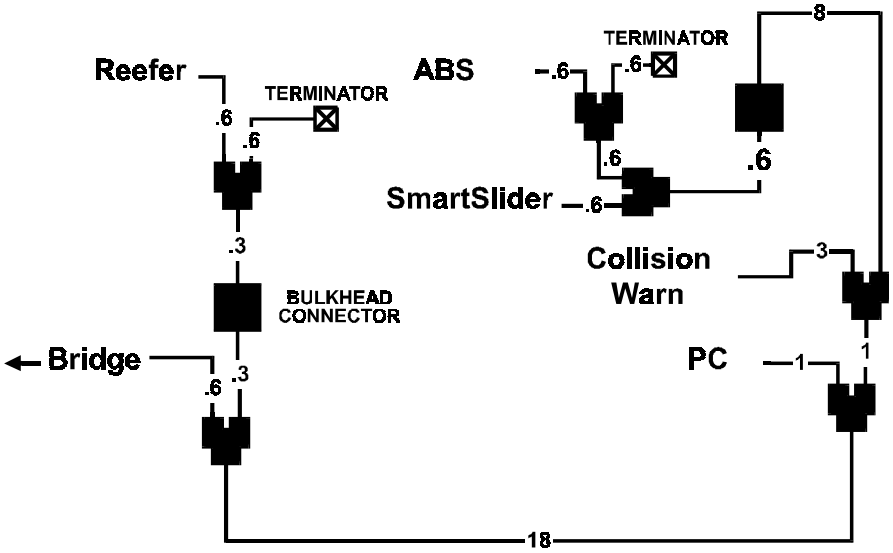

Figure 10 Trailer J1939 wiring

Two suppliers, Champlain and RayChem, provided cable for this vehicle. The Champlain cable was used for the bulk of the installation. The RayChem cable is more flexible and was used in tight locations. Both cables have very similar specifications and can apparently be used interchangeably.

Connectors were supplied by Deutsch and are a modification of one of their standard 3-pin, automotive connectors. These connectors are environmentally sealed.

3.2.2.3 Load Distribution

Load currents were obtained by measurement or from manufacturers' ratings (see Table 3). Note that high in-rush currents can be generated when using incandescent lighting. However, most of the lights on the Smart Trailer are LED's, which operate at lower current levels. Some lighting circuits on the Smart Trailer contain both LED and incandescent lights.

Table 3 Trailer Circuit Loading (amps)

J560 SOURCE TRAILER CIRCUIT	LIGHTS INCAND.	LIGHTS LED	ABS	SLIDER ECU	TRAILER INTERIOR LIGHTS	VORAD COLLISION WARN	LAPTOP	TRAILER BRIDGE	SMART MODE	SMART MODE BROWN	**(worst case)**
BLACK	100/26	3.60									100/26
RED	60/8.4	2.00									85/11.9
YELLOW	30/4.2	11.2/2.4									60/8.4
GREEN	30/4.2	11.2/2.4									30/4.2
BROWN	25/3.5	12/2.0									25/3.5
BLUE			5.6/2.0	2.00	10.00	2.5/1.7	3.30	3.00	30/4.2	25/3.5	81.4/29.7
										Total steady state	83.7

NOTES:

- ALL VALUES IN AMPS
- 100/26 INDICATES INRUSH OR PEAK CURRENT/ THEN STEADY STATE CURRENT
- TYPICAL "DOWN THE ROAD" BLUE CIRCUIT LOADING IS 10.7 AMPS; NO INTERIOR LIGHTS AND NO LAPTOP

3.3 Packaging

3.3.1 Design Requirements

The goal of the packaging was to provide a single enclosure design that would house both the tractor and trailer bridge electronics modules. The enclosures would have to be sufficiently durable and environmentally protected to withstand normal operating conditions on a tractor and trailer. One tractor enclosure and one trailer enclosure were built. The units have similar mechanical hardware; the primary difference between them is the components contained on their printed circuit boards.

3.3.2 Design Overview

3.3.2.1 Vehicle Mounting

The enclosures are designed for a four-point mount. By suggestion from Great Dane, the mounting feet are offset about 1 cm from the rear plane of the enclosure to accommodate any vehicle panel overlap seams, undulations or rivets. The fastening of the unit to the vehicle is accomplished by either a 3/8-16 inch threaded stud or a threaded insert arrangement on the rear of the tractor and/or the front of the trailer. Both units are positioned near the glad hands and are able to use a conventional coil cord length for the wiring connection between them.

3.3.2.2 Enclosure Description

The tractor and trailer enclosures (box and cover) are primarily constructed of 3.2 mm thick 5052-H32 sheet aluminum that is formed and welded (see Figure 11). The internal and specially machined components are made of 6061-T6 aluminum. There are four planar mounting pads that have clearance holes for 3/8” fasteners to be used for vehicle mounting. The enclosures are 29.5 cm high, 35.3 cm wide, and 13.3 cm deep. These dimensions do not include the vehicle mounting tabs or the integral wire raceway for the vehicle discrete wiring connections. The weight of the complete module, ready for installation on the vehicle, is 10.9 kg.

3.3.2.3 Modular Design

The architecture uses a modular design or “works-in-a-drawer” concept. The entire assembly consists of the following four sub-assemblies.

- Enclosure (box with covered wire raceway and lid)
- PC/104 assembly with integral mother board
- Output drivers with integral heat sinking
- Wire entrance and EMI filtering

This approach allows any sub-assembly to be changed with little or no effect on adjacent sub-assemblies and with minimal effort and time. All of the sub-assemblies are interconnected via pigtails and studs and/or internal connectors.

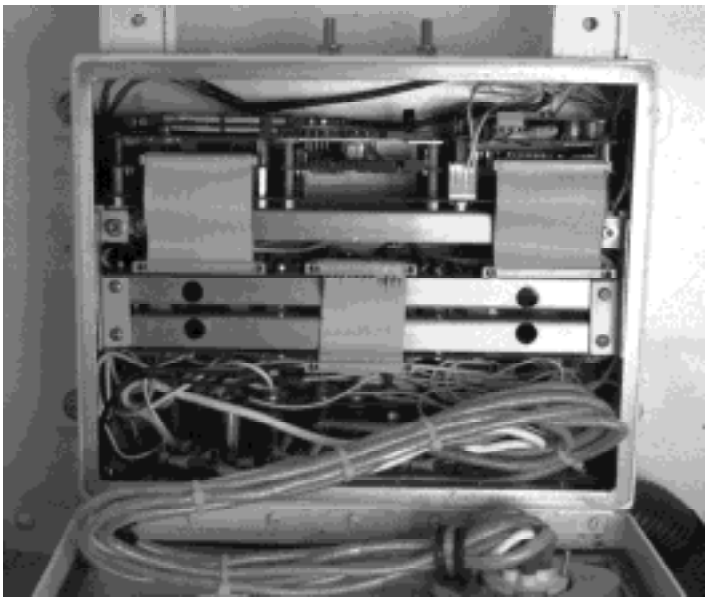

Figure 11 TruckMux™ Enclosure

3.3.3 Sub-Assembly Descriptions

3.3.3.1 Enclosure

The enclosure is designed to provide protection from a harsh environment. The box has a flanged edge around the perimeter of the opening to provide a good sealing surface. This flange also increases the rigidity of the opening. The bottom or lower portion of the enclosure has an integral hinged and covered raceway to protect the entrance to all the vehicle interface wiring. The interior provides sliding shelf brackets for easy installation and removal of boards and to create an alignment for securing them.

The lid also has overlapping flanges on the perimeter to provide rigidity for a sealing surface and to establish a protective lip for a sealing mechanism. Thus, the lid seal is not exposed to flying dirt or rocks or high pressure water from washes. The lid or door is fastened and secured by a stainless steel piano hinge and two clamp bolt mechanisms. These mechanisms also provide for a repeatable amount of seal compression. The rigidity of the secured lid provides a very accessible vertical surface for the J560 coil cord connector. The lid also contains a built-in, covered key lock for security. The door is hinged downward with a stop at 90 degrees to establish a shelf. This shelf creates a convenient working area during trouble-shooting or repair.

3.3.3.2 PC/104

The PC/104 assembly is a modular assembly within itself. It consists of five standard PC/104 boards and a custom mother board (see Figure 12). The mother board assembly is secured to an aluminum sliding shelf with captive hardware for the purpose of easy removal and securing to the enclosure body.

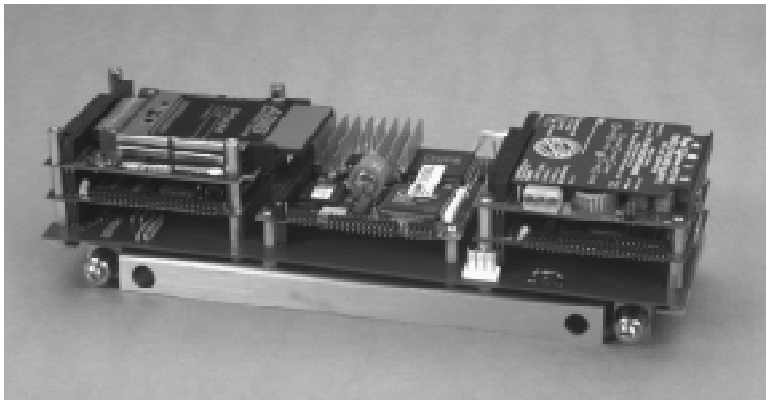

Figure 12 PC/104 Assembly

3.3.3.3 Output Drivers

The output driver assembly consists of two PCB sub-assemblies and their integral heat sinks (see Figure 13). The potentially high current devices that require thermal dissipation are appropriately attached to the heat sinks. These modules are then bolted to a PCB enclosure thermal transfer bar. This bar allows thermal transfer to the entire enclosure which then acts as a large heat sink.

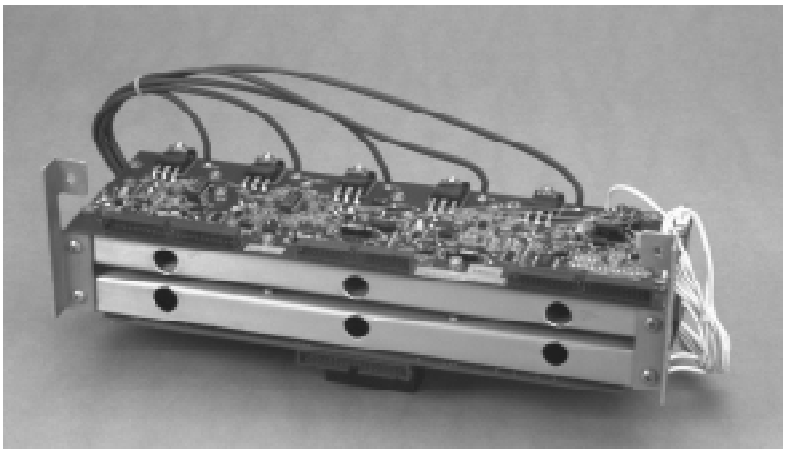

Figure 13 Driver Assembly

3.3.3.4 Wire Entrance

The wire entrance and EMI filter module are secured to the inside bottom of the enclosure. This module contains twenty brass stud assemblies—one for each line entering or exiting the unit (see Figure 14). The studs are isolated from each other and the enclosure by a reinforced insulating material. Each stud assembly has its own EMI filtering mechanism. The J560 coiled cord connector termination lines are also filtered in this module. After all lines have been filtered, the power and signal lines are distributed to their appropriate module termination.

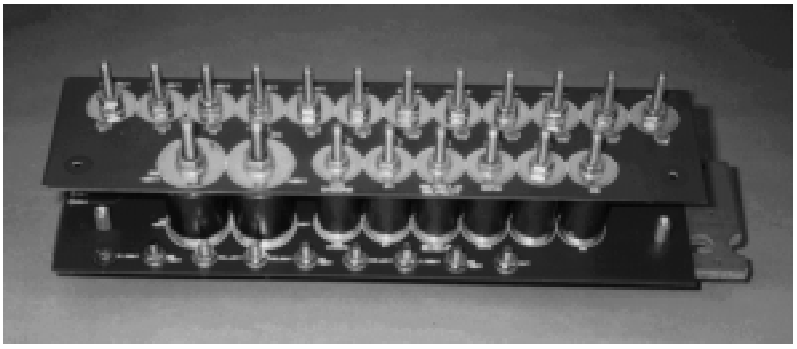

Figure 14 EMI Filter Module

3.3.4 Environmental and EMI protection

The testing performed to-date indicates that the following measures fully protect the TruckMux™ system from environmental stress and EMI found in typical, on-road vehicle conditions.

3.3.4.1 Enclosure

The enclosure is an all-metal box that is connected to chassis ground. The dimensions of the connector and/or stud openings (holes cut in the aluminum enclosure) were minimized to decrease the wavelength of the slot antenna. Each of the stud assemblies (feed through) has its own cylindrical EMI suppression ferrite core filtering. Such cores are generally large and heavy. The largest cores that were practical for vehicle packaging were used. Two different cores were used: with impedance of 221 ohms and 256 ohms at 100 MHz.

The lid seal is a neoprene sponge elastomer with an integral monel wire mesh. This seal acts as a combination environmental and EMI gasket. It is compressed to about 40% of its thickness between the lid and the box flange, providing about 18 pounds/lineal inch of sealing surface. The closed cell foam rubber provides the environmental seal on the outer edge of the box sealing flange and the mesh provides the electrical continuity on the inner edge. Therefore, galvanic corrosion between the mesh and the enclosure is minimized.

3.3.4.2 Surface Protection

All metal surfaces of the aluminum enclosure, both inside and outside, and module sub-assemblies were processed with a chemical conversion coating (MIL-C-5541D—Class 3). This specification provides aluminum components with very high corrosion resistance. The coating also provides a surface for better paint adherence. Class 3 offers protection against corrosion where low resistance is required, as in the case of the EMI gasket sealing. All of the external surfaces were then painted with IMRON polyurethane enamel paint for further protection. This paint provides a surface with high abrasion resistance and a lasting, cosmetically appealing appearance.

3.3.4.3 Thermal Dissipation

Although power MOSFETs were selected for the output drivers (see MOSFET Switches page 19), in part due to their low power dissipation, testing indicated that these transistors would exceed their rated maximum case temperature if operated at the maximum TruckMux™ load current (30 amps). Therefore, heat sinking was required.

The module design requirements of a small enclosure, environmental sealing, and easy removal of the printed circuit boards mandated a unique method of mounting the MOSFETs. Several iterations of heat sink design yielded an approach in which the transistors were screwed to a machined aluminum bracket, which then screwed to the printed circuit board. This bracket was designed so that both of the required printed circuit boards screw to it and the entire assembly then screws to the inside back of the enclosure, providing further heat sinking. Additionally, the enclosure is bolted to steel backing plates through the steel skins of the tractor and trailer.

Although transistor case temperature data was not taken with this heat sink/enclosure assembly, no instances of hot components were found. In fact, no failures of any electronic components have been observed.

3.3.4.4 Electromagnetic Interference Protection

The modules were required to not interfere with vehicle radios or other electronic systems and to not be susceptible to interference from such devices. To meet this design requirement, precautions were taken.

In order to accelerate the design and fabrication of the prototype system, all of the PC/104 computer boards were purchased “off-the-shelf.” Since these boards were not designed to withstand on-vehicle EMI, filtering would be required external to these boards. To accomplish the necessary filtering, each signal (except the J1939 signal lines) passes through a “pi” filter to enter the enclosure. The pi filter consists of a capacitor-to-ground, an in-series ferrite inductor, then a second capacitor-to-ground. Because of the relatively large DC currents in these lines (up to 30 amps), large ferrites were required. The result is a

large and heavy filter assembly. This assembly and associated wiring occupy more than a third of the enclosure space, but have proved to be very effective.

The printed circuit boards that were designed and built at Eaton CoRD-DC have the required EMI filtering built-in. Also, the MOSFET driver circuits were designed to have low radiated noise. Furthermore, no external analog inputs (which are typically prone to electromagnetic interference) are used.

Any circuit which is connected to the battery is susceptible to the vehicle load dump pulse. These pulses can reach 100 volts. For the prototype module design, the load dump is defined as a 100 volt peak pulse with an exponential decay of 400 ms. All circuits in the bridge which are connected to the vehicle battery, with the exception of the PC/104 power supply, were designed by Eaton and have sufficient protection. The PC/104 power supply, however, is rated with a load dump protection to 60 volts.

3.3.4.5 Vibration and Shock

Since the PC/104 computer boards were not designed for on-vehicle use, special mounting provisions were made to help protect these boards from vibration and shock. The boards stack together via their own connectors and are fastened together with screws and standoffs to the mother board. The mother board is in turn fastened to a custom aluminum bracket. This complete assembly then fastens to the enclosure via a custom pin and screw fastener, providing a rigid support.

The output boards designed by Eaton CORD-DC use surface mount components wherever possible. Further, all through-hole components are glued and soldered to the circuit board (PCB). The large current sense resistors, which are a special radial leaded, stand-up type, require a custom aluminum bracket to prevent them from breaking at the leads. The resistors are bonded to their brackets, which are then screwed to the printed circuit board.

The filter assembly is rigidly held together with custom brass, threaded studs. Each stud passes through a filter printed circuit board (one leg of the pi filter), the ferrite core, then the other filter PCB (the other leg of the pi filter). This method not only forms a rugged assembly but also forms the electrical and mechanical requirements of the pi filter.

3.4 Electronics

3.4.1 Major Philosophies Underlying the Bridge Design

The design of the TruckMux™ system rests on the philosophies used to approach four major aspects of the system: 1) the establishment of Conventional Mode and Smart Mode of operation, 2) the selection of MOSFETs for switching devices, 3) the method of power distribution, and 4) the handshaking method used to establish Smart Mode operation. Each of these philosophies is discussed in the following sections.

3.4.2 Conventional Mode and Smart Mode

Conventional Mode is the default mode of system operation. When in Conventional Mode, the tractor/trailer interface functions as the standard SAE J560 seven-way connector. This mode ensures compatibility when either the tractor or trailer has not been converted to TruckMux™.

In Smart Mode, the same J560 connector acts as the multiplexing interface between the tractor and trailer. To create this interface, the functions of six of the seven circuits are changed. Four are used for full time power and two are used for high speed communications (J1939). The existing ground circuit remains unchanged.

This changing or switching is done by inserting an electronic module, or bridge, between the tractor lighting harness and the tractor J560 connector and inserting another bridge between the trailer J560 connector and the trailer lighting harness (refer to **Error! Reference source not found.** and Figure 3). This approach allows normal trailer lighting and powering functions to be performed while supporting high speed data communication between the bridges on the tractor and trailer.

3.4.2.1.1 MOSFET Switches

To accomplish the dual modes of operation described above, a switching device must be inserted in each of the circuits between the tractor and trailer. In fact, one switching element is required at each side of the tractor/trailer interface for each circuit that will change. This is one reason that two bridges are required.

Three common types of switching elements were investigated: bipolar transistors, relays, and power MOSFETs. Bipolar transistors have high voltage drops and require high drive currents when passing large currents, thus leading to high power dissipation. Relays have been the traditional choice for many similar applications; millions are used today on vehicles around the world. The primary advantage of relays is that, since they are passive, they have a small voltage drop when inserted in the lighting circuits. However, because relays use mechanical contacts, there is a reliability issue. Also, contact bounce can occur, especially on the trailer-mounted bridge, due to the high vibration levels commonly experienced. Additionally, the relay has a low frequency response, again due to the mechanical contacts.

Power MOSFETs can be purchased with low internal 'on' resistance, which determines the voltage drop across the device. This is more costly than bipolar transistors, but at the same price level as a comparable relay. Due to the low voltage drop, these devices have a lower power dissipation and are easily driven by a boosted voltage signal. Also, the integrated circuits available to drive MOSFETs can include over-current shutdown, fault outputs, boosted voltage drive signal, and logic control inputs. Finally, MOSFETs can be operated at very high speeds, if required.

As a result of these advantages, power MOSFETs were selected as the switching device in the TruckMux™ bridges. They have proven to be very reliable; no failures have occurred to-date. Typical voltage drops are only 50-100 mV. Also, their small size allowed a compact enclosure design with efficient thermal dissipation.

It is important to note that if the TruckMux™ system was to be designed for a multiple trailer system, particularly a triple trailer system, relays should probably be used. This is because the additive voltage drops incurred by MOSFETs at each trailer bridge would result in a lower voltage at the last trailer. The amount of voltage drop would also be a function of whether the dollies would also have to have bridges.

3.4.2.1.2 System Power Distribution

All tractor J560 circuits were powered from a common battery voltage bus. This allows use of a single transistor for each tractor J560 circuit. Since each MOSFET output circuit is always connected to the battery and the appropriate lighting circuit switch, trailer lighting operation can be maintained independent of the bridge operational status. In Smart Mode, the tractor bridge computer disables the output driver operation from the cab switch inputs and turns on the outputs required for Smart Mode. With this configuration, a computer failure merely results in return to Conventional Mode circuit operation. Failure of either bridge computer results in Conventional Mode operation.

3.4.2.1.3 Handshaking to Establish Smart Mode Operation

Establishing Smart Mode is accomplished automatically; no vehicle operator action is required. With the ignition key off, the bridge is in the default Conventional Mode. When the ignition key is turned on, the tractor bridge computer starts with outputs in Conventional Mode and with the Blue, or auxiliary, circuit powered. This circuit then powers the trailer bridge computer.

The trailer bridge computer also starts in Conventional Mode, but switches a 5 ohm resistor in and out of the Blue circuit at a 20 Hertz rate. This results in a 20 Hz, 2.5 amp current pulse on the Blue circuit. At the same time, the trailer bridge computer "listens" to the Green and Brown circuits for J1939 communications activity. A current sense amplifier is used by the computer in the tractor bridge to detect the 20 Hz pulse on the Blue circuit and then send J1939 communications messages on the Green and Brown circuits. When the trailer bridge computer receives these messages, it sends an acknowledgment and both bridges then switch to Smart Mode. If either bridge fails to receive these messages within a set period of time, the trailer bridge quits pulsing the Blue circuit and both bridges remain in Conventional Mode.

3.4.2.2 Circuit Design Details

The following sections describe the operation of each of the key circuits in the TruckMux™ bridge modules. In most cases the circuits found in the tractor bridge are identical to those found in the trailer bridge; however some important differences are noted.

3.4.2.2.1 Input Circuits

Both bridges have 12 buffered inputs. In the tractor bridge, six of these inputs are dedicated to the six functions of the trailer lighting: stop lamp, tail lamps, side marker lamps, left and right turn lamps, and auxiliary. These inputs provide the tractor bridge computer with the status of the cab mounted switches and drive the corresponding output circuit.

One of the six remaining inputs is connected to the tractor ignition switch and is used to signal the tractor bridge to start-up. Another input is brought out to the stud terminals as a spare. The remaining four inputs are unused.

In the trailer bridge, the same six light function inputs are duplicated, also providing the trailer bridge computer with the status of these light circuits. One other input is dedicated to the trailer ABS ECU fault lamp. This input provides the trailer bridge with the status of the ABS ECU. The remaining five inputs are spares.

Each input operates from a 12 volt, nominal signal, with a “pi”, or C-L-C type filter, resistive voltage divider, and diode protection for shorts to the battery and ground.

3.4.2.2.2 Output Circuits

Both bridges have 10 MOSFET output circuits. There are five each on two output boards. The outputs will operate from 6.5 volts to 30 volts and are similar except for reverse current flow diodes (on phantom current paths) and current limits. All are short circuit and overcurrent protected and allow high in-rush currents typically seen with incandescent lighting.

The tractor bridge uses only six of the outputs, each one driving one circuit of the J560 interface. Each output is rated at 30 amps and can operate independently of the bridge computer. Each output is supplied from the battery voltage through a vehicle mounted circuit breaker.

The trailer bridge uses six of the outputs to operate the six trailer lighting circuits, in response to the status (on or off) of the six J560 circuits. Again, these outputs can function independently of the trailer bridge computer and are rated at 30 amps each, except for the auxiliary output, which is rated at 20 amps. The auxiliary circuit powers the trailer interior lighting, among other things.

One of the remaining trailer bridge outputs provides dedicated power to the trailer ABS system and is rated at 10 amps. Another output provides power to the Smart Slider ECU, the Side and Rear Collision warning ECU, and a diagnostic laptop PC, when used. This output is rated at 20 amps.

The remaining two trailer bridge outputs are used to duplicate the functions of the Conventional Mode right turn and tail lamp circuits, when the system is in Smart Mode. When in Smart Mode the right turn and tail lamp circuits, of the J560 interface, are only used for J1939 communications and therefore cannot be used to operate these trailer lighting functions.

The Smart Mode right turn and tail lamp circuits are powered from the J560 auxiliary circuit and have their outputs connected in parallel with the corresponding Conventional Mode outputs. With this configuration, normal trailer lighting operation is maintained, with seamless switching between Conventional and Smart Modes.

3.4.2.2.3 Current Sensing

Although each output driver (solid state switching circuit) has its own short circuit and overcurrent protection, a current sense amplifier is added to each output. This amplifier uses the same sense resistor already used in the output circuit. It provides the bridge computer with an analog voltage scaled to the current detected in the sense resistor. This information is used to determine open and short circuits and to detect Smart trailer presence.

A Norton current amplifier is used in this circuit because it allows high common mode input voltages, which occur in high-side driver circuits. High-side refers to switching the power side as opposed to the ground side (low). Precise input biasing is required. This is accomplished with multiple precision resistors. Since these are battery-supplied circuits, the actual voltage on the sense resistor will vary over time. To handle this effect, a battery voltage compensation circuit is included with each sense amp. The current sense voltage is summed with the battery compensation voltage, buffered, and sent to an input on the PC/104 A/D board. All of the sense amplifiers are identical except for the tractor auxiliary circuit, which has higher gain to allow easier detection of the 20 Hz trailer presence pulse.

3.4.2.2.4 Watchdog Circuit

One watchdog circuit is used in each bridge module to detect the 100 Hz square wave generated by the CPU in the PC/104 computer whenever it is in Smart Mode. The watchdog circuit converts this signal into a DC logic high signal. The converted signal is then gated to each driver circuit, providing one of the logic signals required to operate the outputs in Smart Mode. In the absence of this signal, the outputs operate only in Conventional Mode. This design provides a fail-safe Conventional Mode operation should the bridge computer fail.

3.4.2.2.5 ABS Fault Lamp Driver

A low side type lamp driver is included with the first tractor output board. Typical operating current is 0.5 A or less. The driver is controlled by the tractor bridge computer, in response to J1939 messages received from the trailer bridge. The lamp itself is mounted in the dash of the tractor to warn the driver of a trailer ABS fault.

3.4.2.2.6 Smart Mode Indicator Lamp Driver

A second lamp driver is included with the second tractor output board. This driver is also controlled by the tractor bridge computer, turning on whenever the system is in Smart Mode. Typical operating current is 0.5 A or less. This lamp is also mounted on the tractor dash and indicates that the system is operating in Smart Mode. This indicator is helpful since the driver cannot otherwise distinguish between Smart and Conventional Modes without the aid of a diagnostic computer.

3.4.2.2.7 Computer Power Supply

The PC/104 computer power supply is a purchased, automotive-grade module with a wide input voltage range. In order to allow the supply to continue working during short power interruptions (due to loose cables, intermittent J560 connections, and other temporary faults), a bank of electrolytic capacitors is included on the PC/104 mother board. It is estimated that a 1-2 millisecond dropout can be tolerated.

A logic input on the power supply module allows it to be turned on and off remotely. This input is connected to the ignition switch input in the tractor bridge module. A second control input is gated with the ignition signal on the mother board. This input is driven from the PC/104 computer. When on (high), it will keep the power supply from turning off when the ignition switch turns off. This allows the bridge computers to have an orderly shut-down. The trailer bridge computer does not shut down until the J560 auxiliary circuit is shut off and that circuit does not shut off until the tractor bridge computer turns it off.

3.4.2.2.8 Mother Board

A custom mother board was designed and built to interconnect the PC/104 computer boards. The PC/104 boards use the standard ISA PC bus and each board has its own built-in interface to this bus. Therefore, the mother board is simply an ISA bus laid out on a printed circuit, with interface connectors placed where required for system packaging. It also contains the PC/104 power supply remote control inputs and gating and the drop out capacitors, as described previously.

The mother board is designed to lay horizontally with connectors spaced to allow three stacks of PC/104 boards. Due to the enclosure height, a maximum of 3 PC/104 boards can be stacked. This gives a maximum of nine PC/104 boards that can be installed in the TruckMux™ enclosure. However, due to space required for connectors and cables, only seven boards can actually be used.

3.4.2.2.9 EMI Filters

As noted in the section 3.3.4.4, an aggressive EMI filter was included in the input circuits. The filter legs are capacitors to ground with a ferrite inductor for the bridge part. This arrangement provides for a low DC loss, since the bridge part of the “pi” filter, the ferrite, is not physically in the circuit. The ferrite simply slips over the brass stud and is retained in place by rubber washers at each end, with the capacitor-containing printed circuit boards on each side, forming a ferrite sandwich. Thus the ferrite attenuates the electromagnetic field instead of passing the electrical currents.

The filter assembly actually contains the vehicle lighting harness connection studs, which are the same studs on which the ferrites mount. The harness connects to this via ring terminals. In this manner, EMI is not conducted into or out of the enclosure from the typically long lighting harness.

3.5 Software

3.5.1 Development Language and Tools

All of the software for the tractor and trailer bridge modules, the diagnostics computer, and the data logging computer is written in Borland C and uses the RTKernel Real-Time Multitasking Kernel and the Softing CANcard Library. The diagnostics module also incorporates the Quinn-Curtis Real-Time Graphics & Measurement / Control Tools.

3.5.2 Operation and Functions

Both bridges by default operate in the Conventional Mode, with each individual lighting circuit controlled normally. If there are any hardware or computer faults while in Smart Mode, the bridges, by their nature revert to Conventional Mode.

Upon start-up, the software initializes the operating system, tasks, I/O hardware, and the CAN communications board. The tasks then read the inputs, control the outputs, and communicate on the J1939 network. Separate tasks are used for the diagnostics and data logging programs.

Smart Mode is established cooperatively between the tractor and trailer. The tractor continually senses current on the blue auxiliary (Aux) line. If it senses a signature current pulse from the trailer on the blue line, the tractor will initiate J1939 communications with the trailer. The smart trailer will then respond with a message and J1939 communications between tractor and trailer will commence.

The following is a chronological listing of initialization tasks:

- Initialize RTKernel Operating Kernel
- Initialize Display, Sound, User I/O
- Initialize Digital I/O Hardware
- Initialize Analog I/O Hardware
- Start Display and Sound Tasks
- Initialize CAN
- Start Remaining Tasks

The following is a listing of the software tasks and shows a top level data flow diagram for both bridges in smart mode.

- Feedback_control
- CAN interrupt processor
- CAN1_receive
- CAN2_receive
- CAN1_transmit
- CAN2_transmit
- CAN_watchdog
- heartbeat
- calc_CAN_rates

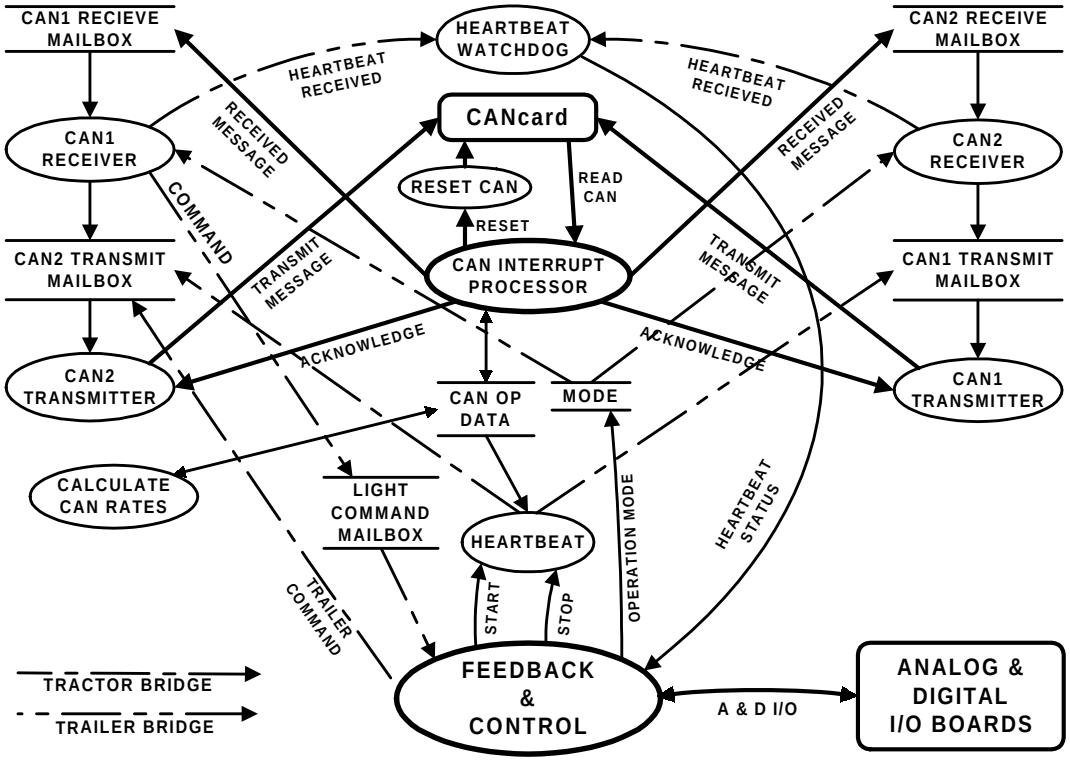

Figure 15 Smart Mode Software Data Flow Diagram

This diagram shows the (rectangular) CANcard and the analog & digital I/O board blocks (these are shown in the upper middle and lower right). Software tasks are shows as elliptical blocks, data stores and mailboxes are shown as parallel line blocks, and data or signal flows are shows with arrows.

At the heart of the operation of the bridges is the feedback & control task (middle bottom) and the CAN interrupt processor task (middle). These tasks have the highest priority of all of the tasks that run in both of the bridges

The feedback & control task operates periodically and senses and controls all I/O and communications. This task senses the light switch states on the tractor and sends control and status messages between the tractor and trailer. This task also senses circuit faults & controls the heartbeat between bridges.

The CAN communications operates on an interrupt basis. Received messages and messages to be transmitted are put into appropriate mailboxes as they are received by the CAN tasks or placed there by the feedback & control and heartbeat tasks respectively. Transmitted messages are acknowledged by the tasks. Bridge operational data, including CAN message rates, are computed and transmitted from the bridges over J1939.

4. TESTING AND EVALUATION

4.1 Board Testing

Three different output boards were designed and built for the TruckMux™ system. They are designated as follows: Tractor Driver (P/N 69884), Trailer Driver (P/N 69830), and Driver Buffer (P/N 69832). Each board was assembled and tested at Eaton prior to assembly in the TruckMux™ system.

4.2 TruckMux™ Full Vehicle Radiated Emission Tests

Full vehicle EMC RF emission level tests conforming to SAE J551/22 were performed. These tests are used to evaluate the performance of electronic equipment on vehicles with respect to the possible interference threat to road side receivers. The frequency range of these tests is 30 MHz to 1000 MHz and is directed toward narrow-band emissions at a distance of 10 meters.

Testing indicated there were no discernible emissions from the vehicle. With both electric and magnetic field antennas, all the results showed no contribution to the local ambient levels due to devices on the vehicle. Additional tests were conducted to verify the operation of the AM and FM entertainment receivers as well as the CB receiver mounted in the cab. All receivers performed without flaw and no interference from onboard equipment was detected.

The full vehicle tests typically run at a 10 meter test distance and from 30 to 1000 MHz. Earlier testing in the anechoic chamber at a 1 meter test distance had shown that the dominant emissions from the J1939 communications loops were in the 10 kHz to 10 MHz frequency range. It is not too surprising to find that at the higher frequencies and at ten times the test distance that there were no significant emission levels. Additionally, tests were conducted next to the vehicle, approximately 2 meters, and no component emissions could be detected from the background noise.

Conclusions to be drawn are:

- Full vehicle testing and limited field performance showed robust performance with the standard cable configuration J1067.
- All EMC design protections incorporated in the bridges were effective.

Future work in this area should consist of susceptibility validation and testing to other relevant national and international specifications. Two other component tests should be conducted on final hardware prototype configurations.

- Component tests to assess the possible interference to on-board communications and entertainment receivers.
- Component tests to assess the possible interference to adjacent vehicle communications and entertainment receivers.

These component tests are only conveniently performed in the anechoic chamber. Also, it is more reasonable to conduct these tests on production hardware prototypes as opposed to the ‘proof of concept’ prototypes available at this time.

4.3 Road Test Results

The TruckMux™ truck has been on the road since July, 1996 and has logged over 31,000 miles with trips around Detroit; to Mount Vernon, Washington; Naples, Florida; Orlando, Florida; Peoria, Illinois; Denton, Texas; San Diego, California; and Eaton Proving Grounds in Marshall, Michigan.

The J1939 networks were purposely loaded up to see how the system would respond. All messages originating on the tractor network were transmitted across the bridge to the trailer network and vice versa. During operation, approximately 500 messages per second were transferred between bridges (600/sec during gear shifting).

Over a billion J1939 messages have since been successfully communicated over a standard coil cord between the tractor and trailer bridges. We successfully tested the system with a 130 foot long (40 meter) J1067 standard connecting cable. Both laptop and in-cab PC/104 computers have been used to diagnose, display, and record data on the system. System data was recorded every 10 seconds while the ignition was on or at every gear change of the Eaton AutoShift™ transmission.

Although capacity of the system was not part of this research program, the system is capable of approximately 1,600 messages per second at 250,000 bits per second (Kbps).

5. CONCLUSIONS

The TruckMux™ system successfully implements an intelligent power and high speed communications link between the tractor and trailer using the standard SAE J1067 seven-wire cable and J560 connector. This link is created by installing specially designed electronic multiplexing modules on the tractor and trailer. These modules use off-the-shelf computing and communications hardware supporting the J1939 protocol. TruckMux™ provides the backbone upon which a variety of advanced information and control functions can be built. The basic product requirements which were verified are:

- Allow any combination of equipped and non-equipped vehicles
- Use the standard seven-pin, J560 connector and cable
- Perform normal trailer lighting functions
- Be non-intrusive to normal trailer lighting functions
- Be transparent to a vehicle operator in both hookup and operation
- Provide for the foreseeable needs of advanced trailer systems

In the TruckMux™ prototype, the following functions were demonstrated:

- Trailer ABS warning light in cab
- Advanced Lighting
- Trailer ID
- Refrigeration status
- Trailer side and rear collision warning
- SmartSlider™ (trailer air brake reservoir low pressure, trailer parking brake status, brake status, air suspension pressure, air suspension height, tandem axle load, trailer door open)

These features use only 5% of the TruckMux™ communications capacity. The system will support many more potentially valuable functions such as EBS.

The TruckMux™ system has two modes of operation to support forward and backward compatibility with conventional tractors and trailers and to provide robustness to electronics failures. Conventional Mode is the default mode of operation in which the J560 retains its normal function. In Smart Mode, the J560 connector acts as the multiplexing interface between the tractor and trailer. Establishing Smart Mode occurs automatically with no driver action required. If either the tractor or trailer electronics modules fails, the system automatically reverts to Conventional Mode.

A tractor trailer outfitted with the TruckMux™ prototype system was driven from Detroit to Seattle. The system operated in Smart Mode during the entire trip. The system operated over 60 hours and handled over 70 million J1939 messages with no failures.

6. RECOMMENDATIONS

1. It is recommended that a Phase II be initiated which would consist of installation of an electronic braking system (EBS) and that the TruckMux™ truck be performance tested. Additional effort could also include adding tire pressure monitoring, roadside communication, sensing of tractor axle weight and gross combined weight (GCW), and characterization of the weighing system.

   Such an EBS demonstration will provide the industry with a clear understanding of the benefits of brake by wire. Additionally, the proposed project will demonstrate to the trucking industry and state agencies an inexpensive, accurate, on-board weighing system which communicates to the roadside. Such information will obviate the need for weigh-in-motion stations, a huge ITS infrastructure savings.

   The vehicles will also pass through inspections areas at any speed, transmitting brake status thereby guaranteeing border crossing without stopping, an important ITS feature to truck fleets.

2. Secondly, an effort should be initiated to field test 50 to 100 TruckMux™ vehicles to evaluate their safety and productivity improvements in an ITS environment, such as the Advantage I-75 corridor. These vehicles would be equipped with EBS, collision warning, intelligent cruise control, SmartSlider™, tire pressure maintenance, and roadside communication. Such a test is necessary to quantify and illustrate societal benefits plus the state and industry benefit necessary to speed introduction.

7. ACRONYMS

ATA	American Trucking Associations
ATAF	American Trucking Associations Foundation
ABS	Anti-lock Braking System
CAN	Controller Area Network
CISPR	International Special Committee on Radio Interference
CoRD-DC	Eaton Corporate Research and Development - Detroit Center
CoRD-MC	Eaton Corporate Research and Development - Milwaukee Center
CPU	Computer Processing Unit
EBS	Electronic Braking System
ECU	Electronic Control Unit
EMC	Electromagnetic Compatibility
EMI	Electromagnetic Interference
FHWA	The Federal Highway Administration
I/O	Inputs and outputs
IEEE	Institute of Electrical and Electronic Engineers
ISA	Industry Standard Architecture
LED	Light Emitting Diode
MOSFET	Metal Oxide on Silicon Field Effect Transistor
NHTSA	The National Highway Traffic Safety Administration
PC	Personal Computer
PCB	Printed Circuit Board
QFD	Quality Function Deployment
RF	Radio Frequency
RP	Recommended Practice
SAE	Society Of Automotive Engineers
TMC	The Maintenance Council
VMS	Vehicle Monitoring System

8. REFERENCES

TruckMux™ Report 95-001, June 30, 1995;TruckMux™ Memo dated May 17, 1995; Tractor Trailer Alternatives Comparison

SAE J560 “Seven Conductor Electrical Connectors for Truck-Trailer Jumper Cable”

SAE J1067 “Seven Conductor Socketed Cable for Truck-Trailer Connections”

9. APPENDICES

9.1 Appendix A Alternative Approach Assessments

9.1.1 Abstract

This appendix provides a technical summary of the evaluation of twelve different alternative approaches to provide improved communications and power from the tractor to the trailer for an on-highway truck. The analysis was based on 14 criteria which were weighted by an initial Quality Function Deployment (QFD) process. Through the assessment process, the TruckMux™ solution was identified as best method of meeting the criteria.

9.1.2 Introduction

This Alternative Approach Assessment and the related analysis which was performed were part of the TruckMux™ program, a cooperative program between NHTSA/FHWA and the trucking industry to develop, evaluate, and demonstrate an Intelligent Tractor/Trailer Communication and Power Link. This appendix describes the analysis performed early in the program to identify the alternative with the best potential for serving the needs of the industry.

9.1.3 Approach

All known potential alternatives were considered with supporting technical documentation gathered from various sources. A list of criteria was developed which identified those requirements that could be used to determine the viability as well as the potential for each alternative.

9.1.4 Assumptions/Observations

- Any Federal requirements take precedence over incremental costs.
- Constraints should not be made by current or proposed Federal regulations (i.e., dedicated ABS wires, etc.)
- The “Future Need” for a tractor/trailer power and communication interface is 2-15 years. This is based on the features and functionality being incorporated onto trailers.
- The assessment of alternatives is to be made through the perspective of a fleet owner.
- Life Cycle Costs are to be treated as more important than initial cost.
- “Support Trailer Combinations” implies providing adequate electrical power.
- Tractors and trailers can be built with 12V or 24V power systems and the system should still function.

9.1.5 Evaluation Criteria

The following criteria were identified for evaluating the merits of each alternative:

- Backward compatibility
- Ability to accommodate all vintage trailers and tractors. This includes the use of the auxiliary pin (Blue wire).
- Adequate continuous power for triples equipped with ABS
- Support for J1939 communications
- Future needs
- Ability to accommodate needs beyond 10 years (EBS, etc.)
- Support ABS power and in-cab warning lamp
- Ability to retrofit to existing trailers
- Support triple combinations (communications, sequential addressing)
- Permit 24V power operation
- System price (initial cost to fleet)
- Total life cycle cost
- Overall cost including maintenance, resale, etc.

- Ability to withstand RFI and environmental exposure
- Reliability
- FMEA - Failure Modes and Effects Analysis This criterion was applied to determine if there were any likely/possible failure modes, to determine the effects on the operation of the system, and to determine if there was a fail-safe or fallback mode of operation.
- Industry Acceptance. Acceptance by fleets, owner operators, drivers, OEMs, suppliers, and the ITS community (in that order).

9.1.6 Weighting Factors

A Quality Function Deployment (QFD) process was used to determine the weighting factor of each of the criteria. All the evaluators representing members of the research team were asked to rate the options from the point-of-view of the fleet operator. The method used was to compare each criterion's importance to each of the other criteria, with one point provided for each "win", and zero for a loss (Table 4). The total number of "wins" for each criterion was used to arrive at a final weighting factor. This is the summation of each row and shown as the weighting in Table 5. This permitted the weighting factor to reflect the relative importance of each criterion as opposed to just creating a linear ranking. The results of the QFD are shown in Table 4 and Table 5.

The criteria receiving the highest weighting factor was FMEA. This is a result of performing the QFD comparison as seen through the eyes of the fleet operator who perceives that the failure modes are the most important factor, followed closely by backward compatibility, reliability, and industry acceptance. It is also important to note that the "Future Needs" criterion was rated below many of the other criteria for the same reason: the comparison was from the fleet operator's perspective. Note that the weighting for retrofit trailers was also low. Retrofitting is expected to occur on only a small number of existing trailers, with most demands for improved power and communications to occur on new trailers. Support for J1939 also received a low weighting because there does not exist a strong demand yet by the industry for communications to the trailer. Note that 24V compatibility had a weighting of zero, so it would have no effect on the alternative approaches.

9.1.7 Alternative Descriptions

Additional alternative solutions were identified and are listed below. Technical information on each may be found in the attachments to the TruckMux™ memo dated May 17, 1995, Tractor Trailer Alternatives Comparison. Note that alternatives 1-4 and 12 address both the power and communications issues, alternatives 5-9 focus on communications only, and alternatives 10 and 11 focus only on providing continuous power. Alternatives 5-9 were assumed to have a separate means to reconfigure the J560 pins in order to improve the available electrical power.

1. Second connector based on the proposed RP J2272 with nine pins.
2. Cole Hersee 13-pin J560 connector (Interspersed Pins) - assumes the existing J560 pins are not reconfigured.
3. Phillips Industries 13-pin J560 connector using split pins
4. TruckMux™ - reconfiguration and multiplexing of existing J560 connector
5. Infrared air link between tractor and trailer
6. RF air link between tractor and trailer
7. Inductive coupler at connector (in plug and in receptacle)
8. Optical glad hand
9. RF modulated on signal wire (power line carrier)
10. Continuous power on auxiliary line
11. Continuous power on brake lamp with brake pressure switch
12. Grote twisted pair - two additional wires with "Attached/Integral" 2-pin sealed connector

9.1.8 Comparison Analysis

Table 4 TruckMux™ Weighting

Description	Compare the row with the column. In the blank area place a 1 if the row is more important than the column, place a 0 if it is not.	Backward Compatibility	Adequate Continuous Power	J1939 Supported	Future Needs	ABS Power and Warning	Retrofit Trailers	Support Trailer Combinations	Permit 24V Power	System Price	Life Cycle Cost	EMC & Environmental Exposure	Reliability	FMEA	Industry Acceptance	***Total***
Ability to accomodate all vintage trailers and tractors	Backward Compatibility		1	1	1	1	1	1	1	1	1	1	0	1	0	**11**
Adequate continuous power for 3 trailers equipped with ABS	Adequate Continuous Power	0		1	1	1	1	0	1	1	1	1	0	0	0	**8**
J1939 Supported	J1939 Supported	0	0		0	0	1	0	1	0	0	0	0	0	0	**2**
Ability to accomodate needs beyond 10 yrs	Future Needs	0	0	1		0	1	0	1	0	0	0	0	0	0	**3**
Ability to accomodate ABS/EBS needs plus compatibility with current standard (dedicated power and separate address)	ABS Power and Warning	0	0	1	1		1	1	1	1	1	0	0	0	1	**8**
Ability to retrofit to existing trailers	Retrofit Trailers	0	0	0	0	0		0	1	0	0	0	0	0	0	**1**
Ability to support 3 trailers	Support Trailer Combinations	0	1	1	1	0	1		1	0	0	0	0	0	0	**5**
Permit 24V Power	Permit 24V Power	0	0	0	0	0	0	0		0	0	0	0	0	0	**0**
Initial System Price to Fleets	System Price	0	0	1	1	0	1	1	1		0	0	0	0	0	**5**
Overall Cost of system including maintenance, resale, etc.	Life Cycle Cost	0	0	1	1	0	1	1	1	1		1	0	0	0	**7**
Ability to withstand the EMC and Truck environment without affect	EMC & Environmental Exposure	0	0	1	1	1	1	1	1	1	0		0	0	0	**7**
Reliability	Reliability	1	1	1	1	1	1	1	1	1	1	1		0	0	**11**
Little or no failure effects - fail benign and revert to an operational standard 7 pin connector	FMEA	0	1	1	1	1	1	1	1	1	1	1	1		1	**12**
Acceptance by the fleets, owner operators, OEM's, suppliers and ITS community in that order	Industry Acceptance	1	1	1	1	0	1	1	1	1	1	1	1	0		**11**
		2	**5**	**11**	**10**	**5**	**12**	**8**	**13**	**8**	**6**	**6**	**2**	**1**	**2**	

Table 5 TruckMux™ Approach Comparison

Description	Directions: Rate each approach against the Eaton MUX; +1 if its better, 0 if it's the same, and -1 if its worse.	Truck MUX Weighting	Second Connector	13 Pin J560 Outer Ring - CH	13 Pin J560 Split Pin/Colinear Phillips	MUX'd J560 Connector Eaton	Infrared Air Link	Rf Air Link	Inductive Coupling at Connector	Optical Glad Hand	Rf Modulated on Signal Line	Continuous power on Blue/Aux. Line	Cont. Pwr. on Brake Lamp w/pres. switch	Grote Twisted Pair
Ability to accomodate all vintage trailers and tractors	Backward Compatibility	11	0	0	-1	0	0	0	0	0	0	-1	-1	0
Adequate continuous power for 3 trailers equippped with ABS	Adequate Continuous Power	8	1	0	-1	0	0	0	-1	-1	-1	0	0	1
J1939 Supported	J1939 Supported	2	1	0	0	0	0	0	-1	0	-1	-1	-1	1
Ability to accomodate needs beyond 10 yrs	Future Needs	3	1	1	-1	0	0	1	-1	-1	-1	-1	-1	0
Ability to accommodate ABS/EBS needs plus compatibility with current standard (dedicated power and separate address)	ABS Power and Warning	8	1	0	0	0	0	0	-1	-1	-1	-1	-1	0
Ability to retrofit to existing trailers	Retrofit Trailers	1	0	0	0	0	0	0	-1	1	1	1	1	0
Ability to support 3 trailers	Support Trailer Combinations	5	0	0	-1	0	0	0	0	0	0	0	0	0
Permit 24V Power	Permit 24V Power	0	0	0	0	0	0	0	0	0	0	0	0	0
Initial System Price to Fleets	System Price	5	0	1	-1	0	-1	-1	0	1	1	1	1	0
Overall Cost of system including maintenance, resale, etc.	Life Cycle Cost	7	-1	0	-1	0	-1	-1	0	0	1	1	1	-1
Ability to withstand the EMC and Truck environment without affect	EMC & Environ. Exposure	7	0	0	-1	0	-1	-1	-1	0	-1	1	1	1
Reliability	Reliability	11	-1	-1	-1	0	-1	-1	0	0	-1	1	1	0
Little or no failure effects - fail benign and revert to an operational standard 7 pin connector	FMEA	12	0	0	-1	0	-1	-1	0	-1	0	0	0	0
Acceptance by the fleets, owner operators, OEM's, suppliers and ITS community in that order	Indusrty Acceptance	11	-1	0	-1	0	-1	-1	0	-1	0	-1	-1	-1
		Total	**-8**	**-3**	**-80**	**0**	**-53**	**-50**	**-29**	**-36**	**-26**	**-4**	**-4**	**-1**

The 14 weighting factors were used to compare each alternative. The method used was to take the TruckMux™ solution as a baseline, and then compare each alternative to it, relative to the 14 criteria. For each criteria, the alternative was either better (+1), the same (0), or worse (-1) than the baseline TruckMux™ solution. The weighting factor is multiplied by the rating and the column is summed to provide the comparison. Table 5 contains the results of the comparison of each of the alternatives.

9.1.9 Conclusions

The results of the comparison analysis based on the weighted criteria indicate that the TruckMux™ solution (#4) was the best alternative. The second connector alternative (#1) got high ratings because it has nine pins to accommodate adequate power and future needs, but was degraded in the area of reliability (more connections) and industry acceptance due to maintenance/replacement costs. Note that if properly configured, the second connector could ultimately (20 years) supersede the J560 connector, with a transition back to a single connector. The Cole Hersee 13-pin J560 connector alternative (#2) also came in very high but was degraded in reliability due to the extra pins. There was also concern about the weight and stiffness of the heavier 13-wire coil cord. The continuous power on the Auxiliary or Brake Lamp circuit alternatives (#10, #11) did provide cost effective and reliable solutions, but were degraded for backward compatibility and industry acceptance. The Auxiliary brake pressure switch to turn on the brake lights also causes an unacceptable visual delay. The Grote twisted pair alternative (#12) provided better power because of the extra pins available, but was degraded under industry acceptance due to its proprietary content. The reduced reliability of this solution did not appear to be significant because of the addition of the two sealed pins on the side of the existing J560 connector.

The Inductive Coupling Alternative (#7) received moderate marks. However, it does not permit the use of a standard coil cord nor can it be disconnected at the tractor end. This is necessary in order to provide an “antenna” in the coil cord plug that couples with the one in the mating receptacle. RF Modulation on the signal line/power line carrier (#9) can provide a high degree of noise immunity and emit very little radiation. However current implementations typically are limited in bandwidth (10kbps). The optical glad-hand alternative (#8) also received moderate marks, however concerns remained regarding the environmental susceptibility and life of the optical devices.

The Infrared Air link alternative (#5) received low marks because of the susceptibility to the environment due to the exposed lens getting dirty. The RF air link (#6) was perceived as either having susceptibility to noise or being rather complex to be immune from other interference including parallel tractor/trailer rigs. The split pin arrangement (#3) received the lowest marks as it appeared to compromise many of the “benefits” provided by the Cole Hersee solution.

Note that with the selection of any alternative as a standard, it is essential that there be industry wide acceptance and support for that particular implementation. This is critical in avoiding compatibility problems.

9.1.10 Epilogue

As a result of the revision to the FMVSS121 requirements made in February 1996, continuous power for ABS (key on) will be required on the Auxiliary/Blue wire (Pin 7) of the J560 connector for all new tractors starting on March 1, 1997, and trailers on March 1, 1998. This will potentially cause some fleets to have a compatibility problem with existing tractors and trailers if the Auxiliary Pin is already used for other purposes. As a result, if the comparison analysis was performed again, some of the alternatives might receive slightly different ratings. In addition, those fleets using pin 7 are currently faced with having to find a solution and possibly retrofit their tractors and trailers to provide their specific “Auxiliary” function via an alternative means.

9.2 Appendix B Trailer Wiring Diagram

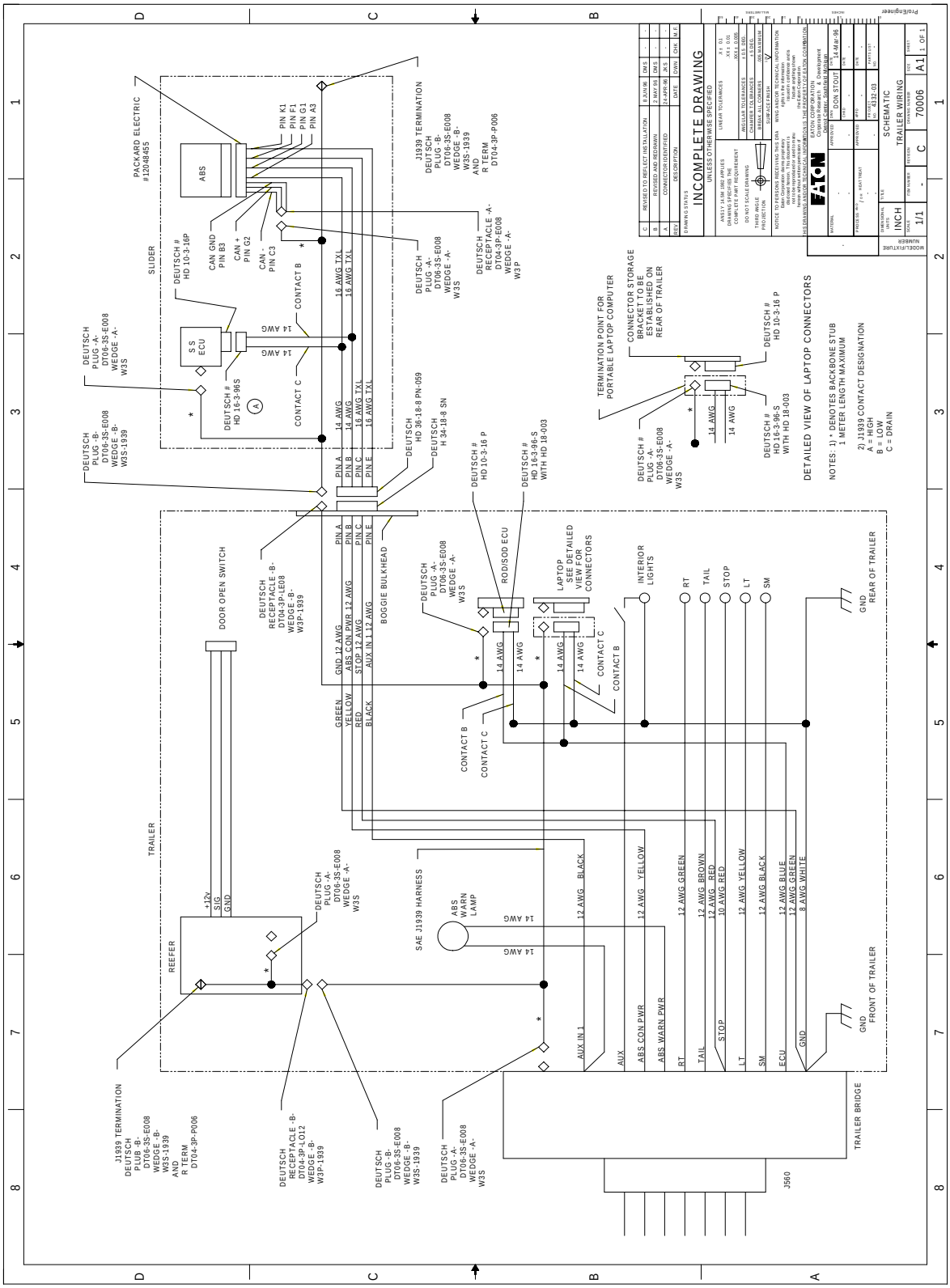

Figure 17 Trailer Wiring

9.3 Appendix C Wiring Harness Voltage Drop Calculations

9.3.1 Purpose

The objective of this report is to determine the voltage drops across the wire harness on trailers with the intended Consortium multiplexing system. The voltage drops have been calculated for single and multiple combination trailers using standard lamp loads. The calculated values will be used to determine proper harnessing layout of the multiplexing system.

An additional objective of this report is to compare the calculated ABS voltage levels on triple trailers for the consortium layout, today's standard trailer layouts, and trailer harnesses with the NHTSA mandated constant power ABS requirement.

9.3.2 Procedure

An Excel™ spreadsheet that automatically calculates the required voltage drops has been developed for multiple trailer harness configurations. The spreadsheet is capable of calculating voltage drops for single, double, and triple trailers when all of the necessary inputs (wire gauges, length of wire, number of trailers, current loads, etc.) are entered.

Various trailer harnessing layouts were used to determine voltage levels at the various electrical loads in single and multiple trailer configurations. The first version of the voltage drop program calculates the voltage levels at various trailer loads with chassis ground connection for the consortium harness layout. The second version of the program determines the voltage levels at various trailer loads that incorporate electrical loads with ground return connections for the consortium layout. The third version of the program calculates the voltage levels that each trailer ABS module would have when connected with dedicated power and ground. Other voltage drop programs have been developed that calculate the voltage levels at various trailer loads on today's standard trailer electrical harness. This includes the NHTSA mandated harness configuration incorporating the constant power line for the trailer ABS.

9.3.3 Results

The following assumptions have been made to determine the voltage drop calculations:

1. Worst-case scenario in which all of the ABS modules are operating at peak current at the same time and all of the lamps are operating (turn lamps flashing in the hazard mode). This would happen rarely with today's ABS systems. Future EBS modules would have the probability of functioning at the same time. Exact EBS current loads are not known at this time.

2. Actual chassis ground resistance in a field application is variable from one vehicle to the next. Calculated values are for estimation and comparison only and are based on all loads being well grounded.

3. No other high current loads other than the ones indicated will be operating through the harness.

4. A single ten milliohm relay contact resistance was used to determine the voltage drop across each bridge on the consortium layouts.

5. The first trailer umbilical cord input voltage level of 13.5 was used. As the voltage level at this point changes, the voltage levels at each load will change accordingly.

6. The ABS modules are powered from the front nose box at each trailer and dolly through the indicated gauge wires and wire lengths.

7. The dedicated ABS power and ground layout used twelve gauge wires between each trailer. Eight gauge wiring was used to calculate the voltage drop from the front nose box to the ABS modules on each trailer.

8. The current heavy duty trucking consensus is that 9.5 volts is the minimum voltage level for ABS and trailer electrical loads.

The results indicate that the final harness layout can be based on the indicated entered data on the spreadsheets with a high probability of the system operating properly. Single trailer ABS systems will have more than sufficient voltage levels to operate properly. The triple trailer harnessing indicates sufficient voltage levels to the ABS modules when the tractor and trailers are all chassis grounded together (LED and one bulb/Marker lamp systems). The following charts indicate the third trailer ABS voltages of all the various layouts.

9.3.4 Conclusion

This report has determined that the consortium wiring configuration with LED lighting, chassis ground, the indicated harness configuration, and with adequate voltage from the tractor is acceptable to use as a starting point for an actual harness build for a triple trailer configuration.

The charts indicate that the triple trailers with dedicated and constant ABS power with chassis ground will provide adequate voltage to the ABS modules in triple trailers with incandescent or LED lighting. All configurations are suspect when a ground return harness is used with incandescent lighting loads.

Various tractor voltages can be entered into the voltage drop programs. Thirteen and a half volts was used as the voltage supplied by the tractor as shown in the attached charts.

The proposed TMC RP 141(T) “Trailer ABS Power Supply Requirements” load line was considered to be used to simulate the tractor in the voltage drop programs. The proposed recommended practice is sufficient for single trailer ABS voltage drop measurements. However, it is inadequate for double and triple trailer combinations.

The power supply requirements indicated in RP 141 chart 1 do not specify if this load line is for all of the trailer loads in total or for each individual circuit.

If it is for all of the loads total, then the power supply would provide zero volts at approximately 45 amps. Triple trailer power loads with ABS can exceed sixty amps in some applications.

If the load line is for just a single circuit, then the power supply would only have to provide 10 volts at 35 amps through the brake circuit. Therefor, a triple-trailer brake circuit (red) could then only drop 0.5 volts through the entire harness in order to meet the 9.5 volt minimum requirement (which is almost impossible).

Today’s trailers power both stop lamps and ABS modules through the red circuit and current draw can theoretically go above thirty-five and even forty amps.

Obviously more research is required in order to develop a “Trailer ABS power supply requirements” document for double and triple trailer applications.

The exact voltage levels that will be measured on actual field applications cannot be calculated for the various trailer harness layouts. The chassis ground systems from one application to the next can vary throughout the life of the system. Actual field testing would have to be conducted for exact voltage levels. The intent of this report was to provide as starting point and a good confidence level that the consortium layout for triple trailers will perform adequately.

Calculated voltage level comparisons with today’s standard trailer harness and the consortium harness layouts has also been determined.

9.3.5 Recommendation

Actual voltage measurements will have to be taken once an actual demonstration system is hardwired together. Then the triple trailer harness can be modified or the loads reduced if the voltage drops are excessive.

ABS Third Trailer Voltage Calculations Compoarison - Incandescent 2 Bulb/Marker Trailer Loads 13.5V at Tractor
Voltage
12
10
8
6
4
2
0
Conventional Incan. (2 bulb) w/ Dolly Lamps, ABS DEDICATED PWR, Chassis GND
Cons. Incan. (2 bulb) w/o Dolly Lamps w/ Chassis Gnd
Conventional Incan. (2 bulb) w/ Dolly Lamps, ABS on STOP, Chassis GND
Conventional Incan. (2 bulb) w/ Dolly Lamps, ABS Dedicated Pwr. Gnd Rtn
Dedicated Power & Ground ABS
Cons. Incan. (2 bulb) w/o Dolly Lamps w/ GND RTN
Conventional Incan. (2 bulb) w/ Dolly Lamps ABS on STOP, GND RTN

ABS Third Trailer Voltage Comparison Calculations - Incandescent 1 Bulb/Marker Trailer Loads - 13.5V at Tractor

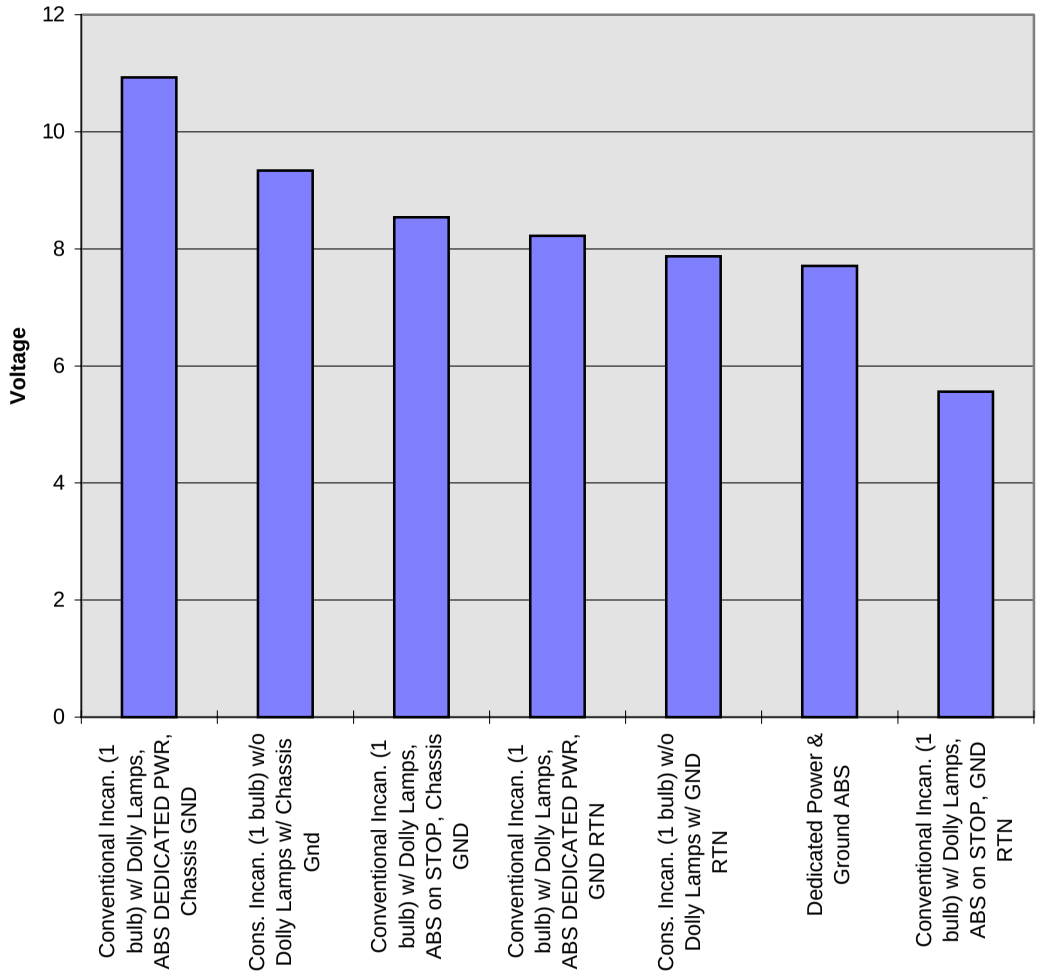

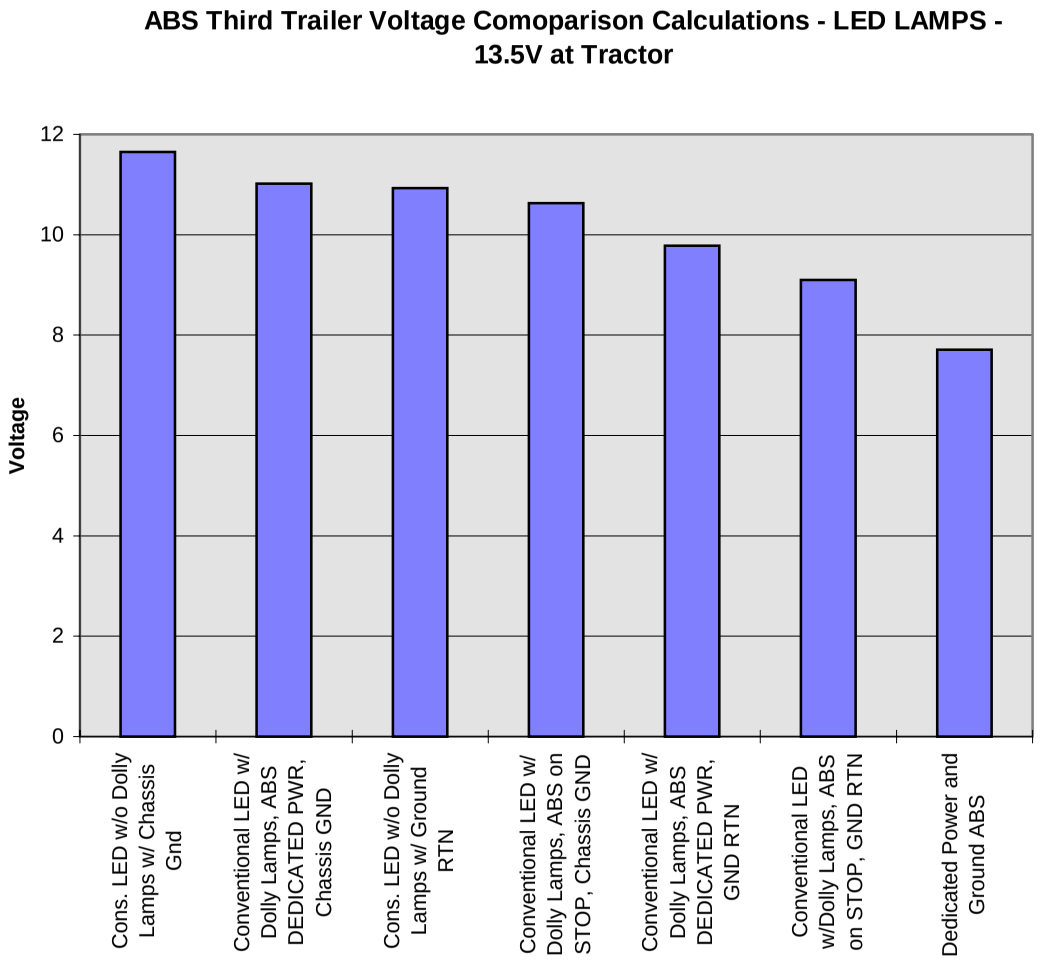
ABS Third Trailer Voltage Comoparison Calculations - LED LAMPS - 13.5V at Tractor
Voltage
0
2
4
6
8
10
12
Cons. LED w/o Dolly Lamps w/ Chassis Gnd
Conventional LED w/ Dolly Lamps, ABS DEDICATED PWR, Chassis GND
Cons. LED w/o Dolly Lamps w/ Ground RTN
Conventional LED w/ Dolly Lamps, ABS on STOP, Chassis GND
Conventional LED w/ Dolly Lamps, ABS DEDICATED PWR, GND RTN
Conventional LED w/Dolly Lamps, ABS on STOP, GND RTN
Dedicated Power and Ground ABS