Idaho Vehicle Collision Report

ITD-90 5-95M 27-010500-0 Revised 12/3/96

Agency Code	Officer #	Report District	Case No.

Date of Collision	Day of Collision (Circle)	Time	Police Dispatched	Police Arrived	EMS Dispatched	EMS Arrived	Location	City or Town
	S M T W T F S						Miles ☐ N ☐ E ☐ IN ☐ S ☐ W ☐ OF	

If Collision location is in:	Complete Box #
Intersection of 2 streets	1, 2
Intersection of Street and: Parking Lot / Driveway / Alley	1, 2, 3
Non-Intersection	1, 3

1	Name of Street: ON ☐ On Private Property	# of Lanes	Posted Speed	County	Interchange #
2	In the Intersection with:		Posted Speed	R. R. Crossing #	Latitude (GPS)
3	Outside an Intersection ☐ Miles ☐ Feet N ☐ S ☐ E ☐ W ☐ OF	Name of Cross Street or # of Ref. Mile Post Marker		Collision Loc Mile Point	Longitude (GPS)

UNIT 1 ☐ Vehicle ☐ Pedestrian ☐ Pedalcyclist

Driver Last First M.I. ☐ Hit & Run

Street Address Home Phone

City State Zip Code Work Phone

Driver's License No. State Idaho Code # / Violation ☐ Cited

Sex	Date of Birth	Prot Dev.	Injury	Ejection	Trapped	Transported

Vehicle Owner Last First M.I. ☐ Same as Driver

Address ☐ As Driver

Vehicle Year	Make (Dodge-Chev.)	Model (Dart-Nova)	Style (2 Dr.)

Vehicle Color License Plate No. State

Vehicle Identification No. Est. Cost of Damage

Insurance ☐ Yes ☐ No Carrier Name Policy Number

Unit Type / Unit Use / Attach 1 / Attach 2

Passenger Names and Addresses (Unit 1 only, additional passengers on page 3)

Same Address as Driver	Seating	Sex	Date of Birth	Prot Dev.	Injury	Ejection	Trapped	Transported
☐								
☐								
☐								

UNIT 2 ☐ Vehicle ☐ Pedestrian ☐ Pedalcyclist

Driver Last First M.I. ☐ Hit & Run

Street Address Home Phone

City State Zip Code Work Phone

Driver's License No. State Idaho Code # / Violation ☐ Cited

Sex	Date of Birth	Prot Dev.	Injury	Ejection	Trapped	Transported

Vehicle Owner Last First M.I. ☐ Same as Driver

Address ☐ As Driver

Vehicle Year	Make (Dodge-Chev.)	Model (Dart-Nova)	Style (2 Dr.)

Vehicle Color License Plate No. State

Vehicle Identification No. Est. Cost of Damage

Insurance ☐ Yes ☐ No Carrier Name Policy Number

Unit Type / Unit Use / Attach 1 / Attach 2

Passenger Names and Addresses (Unit 2 only, additional passengers on page 3)

Same Address as Driver	Seating	Sex	Date of Birth	Prot Dev.	Injury	Ejection	Trapped	Transported
☐								
☐								
☐								

Injured Transported To: **By:**

Seating

Front

1	2	3
4	5	6
7	8	10

Vehicle

Front: 1, 4, 7 — Motorcycle

14 Trailing Unit
16 Pedestrian
17 Pedalcycle
99 Other
U Unknown

Passenger Codes - Non Trailing Unit
11 Sleeper Sect.(Truck Cab)
12 Other enclosed Passngr./Cargo area
13 Unenclosed Passngr./Cargo area
15 Riding on Vehicle Exterior

Protective Devices

0 None
1 Shoulder Belt Only
2 Lap Belt Only
3 Shoulder & Lap
4 Child Safety Seat
5 Helmet Used
6 Nonmotorist

Air Bag Equipped
7 Non-Activated Air Bag, Belts in Use
8 Non-Activated Air Bag, No Belts in Use
10 Air Bag Activated, Belts in Use
11 Air Bag Activated, No Belts in Use

Ejection

1 Not Ejected
2 Totally Ejected
3 Partially Ejected
T Thrown from cycle etc.

Trapped

1 Not Trapped
2 Trapped / Extrication unit used
3 Trapped / other extrication method

Injury

K Dead
A Incapacitating
B Non-Incapacitating
C Possible
0 None Evident
U Unknown

Transported For Medical Care By

1 Ambulance
2 Police Car
3 Helicopter
4 Private Vehicle
5 Not Transported

Unit Type

1 Pedestrian
2 Pedalcycle
3 Motorcycle
4 Moped
6 Car
8 Pickup with Camper
7 Pickup / Van / Panel / Sport Utility Vehicle
30 Farm Equipment (List)
40 Construction Equip. (List)
10 Motorhome
11 Snowmobile
5 ATV
28 Train
99 Other Non-Motor Veh.

Commercial
15 Bus
21 Single Unit Truck - 2 axle/6 Tires
22 Single Unit Truck - 3 axle
23 Truck with Trailer
24 Bobtail
25 Tractor w/Semi Trailer
26 Tractor w/Double Trailer
27 Tractor w/Triple Trailer

Unit Use

1 Police
2 Ambulance
3 Driver Trng.
4 Government
5 Taxi
6 Fire
7 Wrecker
8 School Bus

Attachments

1 Boat Trailer
2 Utility Trailer
3 Travel Trailer
4 Towed Vehicle
5 Mobile Home
9 Other

COMMERCIAL VEHICLE INSTRUCTION SHEET

Commercial Vehicle Definition - For collision reporting purposes only, a commercial vehicle is any vehicle equipped to carry property which has at least 2 axles and 6 or more tires on the ground (including pickups with dual rear tires), any vehicle displaying a hazardous materials placard, and buses designed to carry 16 or more persons, including the driver.

- **Axles** - Record the total number of axles, including auxiliary axles, of this vehicle or vehicle combination (include axles in the up position which are not in contact with the pavement). NOTE: If a unit is transporting other units where one set of axles is on the power unit and another set is on the ground (i.e. logging trucks, piggy back bobtails), record the axles with wheels on the ground.

- **GVWR-Power** - GVWR is the manufacturer's designation for the amount of weight the Vehicle/Tractor was manufactured to haul. GVWR for trucks is usually found on the driver's side of the vehicle on hinge pillar, door-latch post, or door edge. Manufacturer's designation for GVWR should not be confused with registered weight. However, buses are registered at the manufacturer's GVWR, so information may be obtained from the registration.

- **GVWR-Trailer** - Record the combined GVWR of all the trailers. The GVWR for most trailers is located on a plate mounted on the frame near the front left corner of the trailer. For example, the unit is a tractor with a double trailer. Each trailer has a GVWR of 30,000 pounds; enter 60,000 in the GVWR Trailer box.

- **DOT or ICC MC Number for Load** –Determine if the cargo is an interstate load..
  An **interstate** carrier hauls loads between states and must have a United States Department of Transportation (US DOT) number. Any carrier hauling regualted commodities must also have an Interstate Commerce Commission Motor Carrier (ICC MC) number. Exempt loads listed in the IVCR manual do not require ICC MC numbers). The US DOT number (six or seven digits) is always preceded by the letters US DOT. The ICC MC number (up to six digits) may be preceded by the letters ICC or MC. (An **intrastate** carrier hauling loads in only one state is not required to have a US DOT number or an ICC MC number unless they transport hazardous materials.)

  If the vehicle is hauling an interstate load, determine the carrier responsible for the load. The correct US DOT or ICC MC number is that of the carrier or business that controls the movement of the load (not the movement of the truck). For example: OK Truck Company leases a truck to Company X for a month. Company X subleases the truck to haul goods for AB Freight. The loads being transported interstate during that month would be transported under AB Freight's license. AB Freight's number would be the correct number to record.

  To determine the carrier responsible for the load:
  - **Ask the driver** - Who is the motor carrier directing and controlling the movement of this vehicle?
    Who is the motor carrier responsible for the load?
    Is the vehicle leased or rented?
    Where is the motor carrier's principal place of business?
  - **Shipping Papers (Bill of Lading)** - This document should provide the name of the business or carrier responsible for the load and receiving compensation for the movement. Shipping Papers are the written transportation contract between the shipper and the carrier.
  - **Lease Agreement** - These documents identify the lessee. They may contain the correct US DOT and/or ICC MC numbers for the carrier responsible for the load.
  - **Driver's Log** - When logs are required, they should contain the name of the motor carrier and the city and state where the motor carrier's principle place of business is located. This carrier may not be the business controlling movement of the load.
  - **Vehicle Registration** - If the registered owner is the carrier responsible for the load, then record the US DOT and/or the ICC MC numbers from the tags on the side of the truck or truck/tractor (not the trailer). If these numbers are not on the side, ask the driver for the shipping documents. These documents (lease or contract papers) will have the correct US DOT and/or ICC MC numbers.

- **Hazardous Material #** - Placards are diamond shaped. Record either the 4-digit number or the name from the placard. Names might be: Poison, Explosives, Gases. Oxidizer, Radioactive, Corrosive, Dangerous. Trucks hauling chemicals from Canada may have the chemical number in an orange rectangle on the truck. If the placard is an international placard, it could have three groups of numbers. Examples of proper entries would be 1.4-D-1 or 1.1-A-1. If more than one placard is displayed, record only one.

If the owner of the vehicle is not the carrier responsible for the load, record name and address for the carrier responsible for the load in the space provided. If completing this information on an additional unit, record name and address in Narrative/Additional Information section on page 3.

- **Exempt Carriers** - are subject to the Federal Motor Carrier Safety Regulations. They are called "Exempt Carriers" because they are exempt from the economic regulations of the Interstate Commerce Commission. See VCR Manual for a list of exempt carriers.
  - Vehicles which haul "exempt" loads on intrastate runs are not required to have either a US DOT or ICC MC number. They operate under provisions of Section 203(b) of the Motor Carrier Act. Exempt loads are listed in the Vehicle Collision Report From Manual.
  - Vehicles which haul "exempt" loads on interstate runs are required to have a US DOT number.

Idaho Vehicle Collision Report
Additional Units

ITD-90A 10-9-96
27-010505-9

Date of Collision	Time	Agency	Officer #	Case No.

UNIT___ ☐ Vehicle ☐ Pedestrian ☐ Pedalcyclist

Driver Last First M.I.
☐ Hit & Run
Street Address Home Phone
City State Zip Code Work Phone
Driver's License No. State Idaho Code # / Violation ☐ Cited
Sex | Date of Birth | Prot Dev. | Injury | Ejection | Trapped | Transported

Vehicle Owner Last First M.I.
☐ Same as Driver
Address
☐ As Driver
Vehicle Year | Make (Dodge-Chev.) | Model (Dart-Nova) | Style (2 Dr.)
Vehicle Color | License Plate No. | State
Vehicle Identification No. | Est. Cost of Damage
Insurance ☐ Yes ☐ No | Carrier Name | Policy Number

Unit Type
Unit Use
Attach 1
Attach 2

Passenger Names and Addresses (This unit only, additional passengers on page 3)

	Same Address as Driver	Seating	Sex	Date of Birth	Prot Dev.	Injury	Ejection	Trapped	Trans-ported
	☐								
	☐								
	☐								

UNIT___ ☐ Vehicle ☐ Pedestrian ☐ Pedalcyclist

Driver Last First M.I.
☐ Hit & Run
Street Address Home Phone
City State Zip Code Work Phone
Driver's License No. State Idaho Code # / Violation ☐ Cited
Sex | Date of Birth | Prot Dev. | Injury | Ejection | Trapped | Transported

Vehicle Owner Last First M.I.
☐ Same as Driver
Address
☐ As Driver
Vehicle Year | Make (Dodge-Chev.) | Model (Dart-Nova) | Style (2 Dr.)
Vehicle Color | License Plate No. | State
Vehicle Identification No. | Est. Cost of Damage
Insurance ☐ Yes ☐ No | Carrier Name | Policy Number

Unit Type
Unit Use
Attach 1
Attach 2

Passenger Names and Addresses (This unit only, additional passengers on page 3)

	Same Address as Driver	Seating	Sex	Date of Birth	Prot Dev.	Injury	Ejection	Trapped	Trans-ported
	☐								
	☐								
	☐								

CONTRIBUTING CIRCUMSTANCES - 3 Possible

UNIT ☐ ☐ ☐

0 None
1 Exceeded Posted Speed
2 Speed Too Fast for Conditions
3 Too Slow for Traffic
4 Improper Overtaking
5 Improper Lane Change
6 Following Too Close
7 Drove Left of Center
8 Off Roadway Over Corrected
10 Improper Backing
11 Improper Turn
12 Failed to Signal
13 Failed to Yield
14 Passed Stop Sign
15 Disregarded Signal
16 Tire Defect
17 Wheel Defect
18 Light Defect
19 Other Vehicle Defect
21 Alcohol Impaired
34 Drug Impaired
22 Inattention
23 Vision Obstruction
24 Asleep/Drowsy
25 Sick
26 Fatigued
27 Physical Impairment
28 Improperly Parked
31 Previous Accident
32 Distraction in/on Vehicle (List)
99 Other

UNIT ☐ ☐ ☐

VISION OBSTRUCTION

☐

0 None
1 Curve in Road
2 Hill Crest
3 Roadway Slope/Snowbank
4 Trees/Crop/Brush
5 Reflection from Surface
6 Bright Sunlight
7 Bright Headlights
8 Weather Conditions
10 Rain/Snow/Ice on Windows
11 Cracked/Dirty Windows
12 Splash/Spray from Other Vehicle
18 Vehicle Stopped on Roadway
13 Moving Vehicle
14 Parked Vehicle
15 Traffic Sign
16 Billboard/Fence
17 Building
99 Other

☐

Seating

Front

1	2	3
4	5	6
7	8	9

Vehicle

Front

1
4
7

Motorcycle

14 Trailing Unit
16 Pedestrian
17 Pedalcycle
99 Other
U Unknown

Passenger Codes - Non Trailing Unit
11 Sleeper Sect.(Truck Cab)
12 Other enclosed Passngr./Cargo area
13 Unenclosed Passngr./Cargo area
15 Riding on Vehicle Exterior

Protective Devices

0 None
1 Shoulder Belt Only
2 Lap Belt Only
3 Shoulder & Lap
4 Child Safety Seat
5 Helmet Used
6 Nonmotorist

Air Bag Equipped
7 Non-Activated Air Bag, Belts in Use
8 Non-Activated Air Bag, No Belts in Use
10 Air Bag Activated, Belts in Use
11 Air Bag Activated, No Belts in Use

Ejection
1 Not Ejected
2 Totally Ejected
3 Partially Ejected
T Thrown from cycle etc.

Trapped
1 Not Trapped
2 Trapped / Extrication unit used
3 Trapped / other extrication method

Injury
K Dead
A Incapacitating
B Non-Incapacitating
C Possible
0 None Evident
U Unknown

Transported For Medical Care By
1 Ambulance
2 Police Car
3 Helicopter
4 Private Vehicle
5 Not Transported

Unit Type
1 Pedestrian
2 Pedalcycle
3 Motorcycle
4 Moped
6 Car
8 Pickup with Camper
7 Pickup / Van / Panel / Sport Utility Vehicle
30 Farm Equipment (List)
40 Construction Equip. (List)
10 Motorhome
11 Snowmobile
5 ATV
28 Train
99 Other Non-Motor Veh.

Commercial
15 Bus
21 Single Unit Truck - 2 axle/6 Tires
22 Single Unit Truck - 3 axle
23 Truck with Trailer
24 Bobtail
25 Tractor w/Semi Trailer
26 Tractor w/Double Trailer
27 Tractor w/Triple Trailer

Unit Use
1 Police
2 Ambulance
3 Driver Trng.
4 Government
5 Taxi
6 Fire
7 Wrecker
8 School Bus

Attachments
1 Boat Trailer
2 Utility Trailer
3 Travel Trailer
4 Towed Vehicle
5 Mobile Home
9 Other

IDAHO VEHICLE COLLISION REPORT
ADDITIONAL UNITS

VEHICLE DAMAGE:--Initial Point of Impact - Point of First Contact
--Principal Point of Impact - Point of Greatest amount of damage

EXTENT OF DEFORMITY:
0 - no damage;
1 - very minor damage;
2 - minor damage (damage limited to dents and gouges in body sheet metal and trim);
3 - minor/moderate damage;
4 - moderate damage (considerable crumpling of body sheet metal, but little or no distortion of the basic structure or frame);
5 - moderate/severe damage;
6 - severe damage (sheet metal is severely distorted, torn or crumpled, basic structure of the car is somewhat distorted and there is usually some penetration of the passenger compartment);
7 - very severe damage (basic structure of the vehicle is distorted, passenger compartment is penetrated);

COMMERCIAL VEHICLE INSTRUCTION SHEET

Commercial Vehicle Definition - For collision reporting purposes only, a commercial vehicle is any vehicle equipped to carry property which has at least 2 axles and 6 or more tires on the ground (including pickups with dual rear tires), any vehicle displaying a hazardous materials placard, and buses designed to carry 16 or more persons, including the driver. **Please refer to the instruction sheet located on the back of the second sheet of the Idaho Vehicle Collision Report to complete this section.** Information on the name of the carrier should be recorded in the Narrative section on the initial report if the carrier responsible for the load is different from the vehicle owner.

EVENTS --Events for all units should be listed on page three of the initial report. **The only events listed on the Additional Units Supplement would be those that did not fit on the initial report.** Determine which units were involved and where the event occurred. In a collision involving two or more vehicles there must be a shared event when the vehicles collide. In general, the events listed on the right side (50-61) are events involving two vehicles. The remainder are generally single vehicle events.

Event	Unit # of Units Involved		Event Location
72	1		1
53	1	2	1
05		2	3
47		2	4
01	1		1
50	1	3	1
05		3	3
45		3	5

Additional Units

Event	Unit # of Units Involved		Event Location
01		3	4

For example, a vehicle crosses the center line (#72) and sideswipes an oncoming car (#53), forcing it off the road on the right (#5), where it crashes into a tree (#47). Before coming to rest, the first vehicle rolls (#1) on the roadway and is hit by another oncoming vehicle (#50) and the impact causes the third vehicle run off the road (#5) on the right, hit a fence (#45) and overturn (#1) on the roadside. Event information would be entered on the original VCR. In this example, the third unit was involved in the second sideswipe, ran off the road, and overturned. This collision is correctly coded to the right.

EVENT LOCATION -- Describe where the event occurred:

--Roadside - refers to the area between the shoulder and the property line. Note: **Sidewalks are considered Roadside.**

--Outside right-of-way - refers to locations beyond the property line.

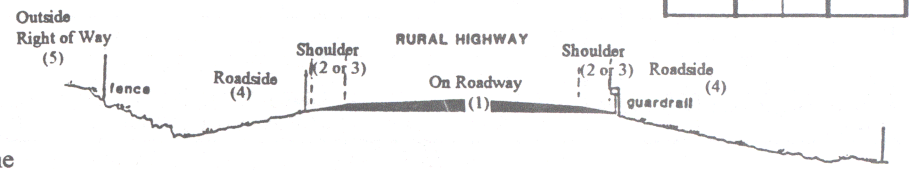

HARMFUL EVENTS

--First Harmful Event - is the first event that causes property damage or injury.

--Most Harmful Event - is the event that causes the most property damage or most severe injury. Fatalities take precedence over injuries, injuries take precedence over property damage.

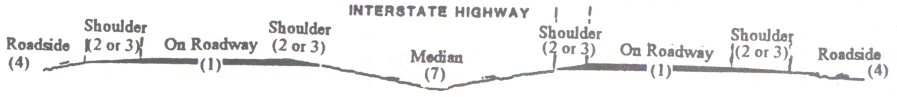

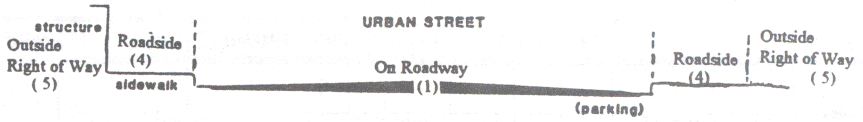

Officer #	Case No.

Locality

1 Business/Commercial 3 School/Playground 5 Agricultural 7 Residential
2 Industrial/Manufacturing 4 Recreational Area 6 Undeveloped

Light Conditions

1 Day 3 Dark - Street Lights On 5 Dark - No Street Lights
2 Dawn/Dusk 4 Dark - Street Lights Off

Weather Conditions - Two Selections Possible

1 Clear 3 Rain 5 Sleet/Hail 7 Blowing Dust/Sand A Smoke/Smog
2 Cloudy 4 Snow 6 Fog 8 Severe Cross Winds

Road Surface Conditions

1 Dry 3 Slush 5 Snow 7 Water
2 Wet 4 Ice 6 Mud 9 Other

Other Road Conditions

0 None 4 High/Low Shoulder 8 Flooded
1 Ruts/Bumps/Holes 5 Loose Gravel/Seal Coat 9 Poor Pavement Markings
2 Slick Asphalt (Bleeding) 6 Under Construction
3 Washboard 7 Lane Closed

Road Type

1 2-Way & Raised/Depressed Divider 5 Ramp
2 2-Way & 2-Way Left Turn Lane Divider 6 Alley
3 One-Way 7 Rest Area
4 2-Way & No Divider 8 Port of Entry
A 2-Way & 2 Double Yellow Painted Divider 9 Other

Road Surface Type

1 Concrete 2 Paved (Asphalt/Brick) 3 Gravel/Stone 4 Dirt

Roadway Geometrics

1 Straight 2 Curve
1 Upgrade/Downgrade 3 Hillcrest 5 Level

Traffic Control

0 None 4 Flashing Beacon 8 Officer/Flagger
1 Stop Sign 5 Traffic Signal-Ped. Only A School Bus Signal
2 Yield 6 R. R. Gates/Signal B No-Pass Barrier Line
3 Traffic Signal 7 R. R. Flashing Beacon C Construction Signing

SPECIFY 1 Functioning 2 Not Functioning 3 Removed

CONTRIBUTING CIRCUMSTANCES - 3 Possible

UNIT # 1 | UNIT # 2

0 None
1 Exceeded Posted Speed
2 Speed Too Fast for Conditions
3 Too Slow for Traffic
4 Improper Overtaking
5 Improper Lane Change
6 Following Too Close
7 Drove Left of Center
8 Off Roadway / Over Corrected
10 Improper Backing
11 Improper Turn
12 Failed to Signal
13 Failed to Yield
14 Passed Stop Sign
15 Disregarded Signal
16 Tire Defect
17 Wheel Defect
18 Light Defect
19 Other Vehicle Defect
21 Alcohol Impaired
34 Drug Impaired
22 Inattention
23 Vision Obstruction
24 Asleep/Drowsy
25 Sick
26 Fatigued
27 Physical Impairment
28 Improperly Parked
31 Previous Accident
32 Distraction in/on Vehicle (List)
35 Improper use of Turn Lane
99 Other

VISION OBSTRUCTION

0 None
1 Curve in Road
2 Hill Crest
3 Roadway Slope/Snowbank
4 Trees/Crop/Brush
5 Reflection from Surface
6 Bright Sunlight
7 Bright Headlights
8 Weather Conditions
10 Rain/Snow/Ice on Windows
11 Cracked/Dirty Windows
12 Splash/Spray from Other Vehicle
18 Vehicle Stopped on Roadway
13 Moving Vehicle
14 Parked Vehicle
15 Traffic Sign
16 Billboard/Fence
17 Building
99 Other

POINT OF IMPACT

INITIAL Point of Impact
PRINCIPLE Point of Impact

Auto / Motorcycle / Tractor with Semi Trailer
13 Top & Windows
14 Undercarriage

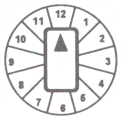

Trailing Unit #1
33 Top
34 Undercarriage

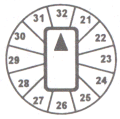

Trailing Unit #2
53 Top
54 Undercarriage

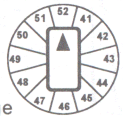

INITIAL Point of Impact
PRINCIPLE Point of Impact

EXTENT OF DEFORMITY

0 None 1 Very Minor 2 Minor 3 Minor/Moderate 4 Moderate 5 Moderate/Severe 6 Severe 7 Very Severe

Towed Due to Damage ☐ Yes ☐ No

Towed By:

Towed By:

Towed Due to Damage ☐ Yes ☐ No

Driver of UNIT # 1 — ALCOHOL / DRUG INVOLVEMENT — Driver of UNIT # 2

1 Neither Alcohol or Drugs Detected 2 Yes - Alcohol 3 Yes - Drugs 4 Yes - Both

Alcohol Test
Drug Test

Alcohol / Drug Test

1 None Given 2 Test Refused 3 Blood Test 4 Urine Test 5 Breath Test 6 Field Test

Alcohol Test
Drug Test

BAC Test Results:	Drug Used (if known):	Drug Test Results	BAC Test Results:	Drug Used (if known):	Drug Test Results
. / .			. / .		

COMMERCIAL VEHICLE

Refer to Instruction Sheet before completing

UNIT # 1 | UNIT # 2

Cargo Body

1 Bus 2 Van/Enclosed Box 3 Cargo Tank 4 Flatbed 5 Dump 6 Concrete Mixer 7 Auto Transporter 8 Garbage/Refuse 9 Other 10 Pickup Bed

# Axles	GVWR-Power	GVWR-All Trailers	ICC # For Load	DOT # For Load

Hazardous Material Placard: ☐ Yes ☐ No Spilled: ☐ Yes ☐ No Haz-Mat #

# Axles	GVWR-Power	GVWR-All Trailers	ICC # For Load	DOT # For Load

Hazardous Material Placard: ☐ Yes ☐ No Spilled: ☐ Yes ☐ No Haz-Mat #

Carrier Name & ICC# or DOT# for Load obtained from...

1 Shipping Papers 2 Vehicle Side 3 Driver 4 Log Book 9 Other

(If Carrier different from Vehicle Owner)
Carrier Name
Address
City State Zip

(If Carrier different from Vehicle Owner)
Carrier Name
Address
City State Zip

IDAHO VEHICLE COLLISION REPORT

VEHICLE DAMAGE: --Initial Point of Impact - Point of First Contact
--Principal Point of Principal - Point of Greatest amount of damage

ROAD TYPE:

--Two-way raised/depressed divider - A two-way road with a raised or depressed center section used to restrict traffic.
--Two-way & Two-Way left-turn lane divider - A two-way road with a painted center divider used primarily as a continuous left-turn lane (often referred to as a center turn lane).
--Two-way road & no divider - A two-way road divided by a painted line(s). The space between the painted lines is generally less than four feet.
--Two-way and two double yellow painted divider - A two-way road divided by two double yellow painted lines indicating do not cross. This is considered the same as a raised divider. A divider is generally at least 4 feet wide.

EXTENT OF DEFORMITY:

0 - no damage;
1 - very minor damage;
2 - minor damage (damage limited to dents and gouges in body sheet metal and trim);
3 - minor/moderate damage;
4 - moderate damage (considerable crumpling of body sheet metal, but little or no distortion of the basic structure or frame);
5 - moderate/severe damage;
6 - severe damage (sheet metal is severely distorted, torn or crumpled, basic structure of the car is somewhat distorted and there is usually some penetration of the passenger compartment);
7 - very severe damage (basic structure of the vehicle is distorted, passenger compartment is penetrated);

EVENTS:

List events for <u>all units</u> in the order that they occurred. For each event determine which units were involved and where the event occurred. In a collision involving two or more vehicles there must be a shared event when the vehicles collide. In general, the events listed on the right side (50-61) are events involving two vehicles. The remainder are generally single vehicle events.

For example, a vehicle crosses the center line (#72) and sideswipes an oncoming car (#53), forcing the oncoming vehicle off the road on the right (#5), where it crashes into a tree (#47). This two vehicle collision is correctly coded to the right. <u>Please refer to the additional units form to view a three vehicle collision.</u>

Event	Unit # of Units Involved		Event Location
72	1		1
53	1	2	1
05		2	3
47		2	4

EVENT LOCATION:

Describe where the event occurred:

Roadside - refers to the area between the shoulder and the property line. Note: **Sidewalks are considered Roadside.**

Outside right-of-way - refers to locations beyond the property line.

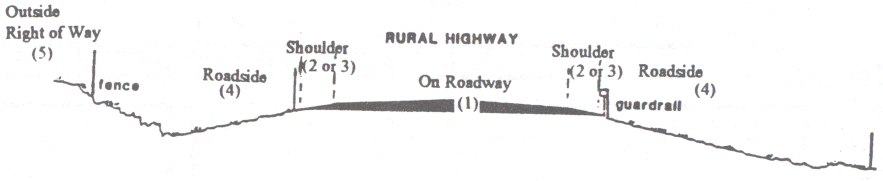

HARMFUL EVENTS:

First Harmful Event - is the first event that causes property damage or injury.

Most Harmful Event - is the event that causes the most property damage or most severe injury. Fatalities take precedence over injuries, injuries take precedence over property damage.

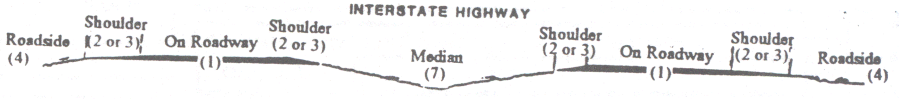

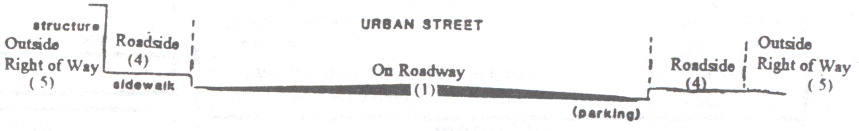

Officer#	Case No.

___ UNIT

INITIAL Point of Impact

PRINCIPLE Point of Impact

POINT OF IMPACT

Auto / Motorcycle / Tractor with Semi Trailer	Trailing Unit #1	Trailing Unit #2
13 Top & Windows 14 Undercarriage	33 Top 34 Undercarriage	53 Top 54 Undercarriage

UNIT ___

INITIAL Point of Impact

PRINCIPLE Point of Impact

EXTENT OF DEFORMITY

0 None 1 Very Minor 2 Minor 3 Minor/Moderate 4 Moderate 5 Moderate/Severe 6 Severe 7 Very Severe

Towed Due to Damage ☐ Yes ☐ No

Towed By:

Towed By:

Towed Due to Damage ☐ Yes ☐ No

___ UNIT Driver — ALCOHOL / DRUG INVOLVEMENT — Driver UNIT ___

1 Neither Alcohol or Drugs Detected 2 Yes - Alcohol 3 Yes - Drugs 4 Yes - Both

Alcohol Test

Drug Test

Alcohol / Drug Test

1 None Given 2 Test Refused 3 Blood Test 4 Urine Test 5 Breath Test 6 Field Test

Alcohol Test

Drug Test

BAC Test Results:	Drug Used (if known):	Drug Test Results	BAC Test Results:	Drug Used (if known):	Drug Test Results
. / .			. / .		

___ UNIT — COMMERCIAL VEHICLE — UNIT ___

Refer to Instruction Sheet before completing

Cargo Body

1 Bus 2 Van/Enclosed Box 3 Cargo Tank 4 Flatbed 5 Dump 6 Concrete Mixer 7 Auto Transporter 8 Garbage/Refuse 9 Other 10 Pickup Bed

# Axles	GVWR-Power	GVWR-All Trailers	ICC # For Load	DOT # For Load

Hazardous Material — Placard: ☐ Yes ☐ No — Spilled: ☐ Yes ☐ No — Haz-Mat #

# Axles	GVWR-Power	GVWR-All Trailers	ICC # For Load	DOT # For Load

Hazardous Material — Placard: ☐ Yes ☐ No — Spilled: ☐ Yes ☐ No — Haz-Mat #

Carrier Name & ICC# or DOT# for Load obtained from...

1 Shipping Papers 2 Vehicle Side 3 Driver 4 Log Book 9 Other

If Carrier name is different from vehicle owner, record the name and address in the narrative on page 3.

Event	Unit # of Units Involved		Event Location

EVENTS - List events for ALL units on page 3.

Use this area only for events which do not fit on page 3.

1 Overturn
2 Separation of Units
3 Cargo Loss/Shift
4 Jack-Knifed
5 Ran off Road
6 Down Hill Runaway
7 Fire/Explosion
8 Gas/Inhalation
9 Other Noncollision
10 Loss of Control
11 Fell/Pushed/Jumped
12 Non-Collision Injury
13 Immersion
71 Came Back on Road
72 Drove L/R of Center

One Veh. Collision With

14 Pedestrian
15 Pedalcycle
16 Railroad Train
17 Domestic Animal
18 Wild Animal
19 Other Object Not Fixed
20 Parked Vehicle on Private Property
21 Impact Attenuator
22 Bridge/Pier/Abutment
23 Bridge Parapet End
24 Bridge Rail
25 Overpass
26 Guardrail Face
27 Guardrail End
28 Median Barrier
30 Highway Traffic Sign Post
31 Overhead Sign support
32 Street Light Support
33 Utility Pole
39 Other Pole
40 Delineator Post
41 Culvert
42 Curb
43 Ditch
44 Embankment
45 Fence
46 Mailbox
47 Tree
48 Building Wall
49 Other Fixed Object

Sideswiped Same 52

Sideswiped Opposite 53

Angle 58

Turning Events

Head-On 54

Angle 59

Rear-End 56

Same Dir 62

50 Head-On
51 Rear-End
60 Backed Into
61 Parked Veh.
99 Other

THE EVENT LOCATION

1 On Roadway
2 Left Shoulder
3 Right Shoulder
4 Roadside (Includes Sidewalk)
5 Outside Right of Way
6 Off Roadway - Loc Unknown
7 Median
8 Gore
9 Other
A In Parking Lot
B Parking Lot Access Road
P Private Property

___ UNIT — FIRST EVENT RELATIONSHIP TO JUNCTION — UNIT ___

0 Nonjunction 1 In Intersection 2 Intersection Related 3 At Driveway/Alley 4 Driveway/Alley Related 5 On Ramp 6 Ramp Related 7 At Railroad Crossing 9 Other

FIRST Harmful Event

MOST Harmful Event

Driver / Ped Action

GENERAL DIRECTION OF TRAVEL

(If turning, select direction before turning)

General Direction of Street	Unit Direction	General Direction of Street	Unit Direction
☐ South / North	☐ North ☐ South	☐ South / North	☐ North ☐ South
☐ West / East	☐ East ☐ West	☐ West / East	☐ East ☐ West
On Street		On Street	

FIRST Harmful Event

MOST Harmful Event

Driver / Ped Action

Driver Actions

1 Going Straight
2 Turning Right
3 Right Turn on Red
4 Turning Left
5 Left Turn on Red
6 U-Turn
7 Merging
8 Changing Lanes
10 Passing
11 Negotiating Curve
12 Stopped in Traffic
13 Slowing in Traffic
14 Starting in Traffic
15 Parking
16 Entering Drivwy./Alley
17 Leaving Drivwy./Alley
18 Backing
20 Avoiding Obstacle
21 Avoiding Veh./Ped.
22 Pursuing Vehicle
23 Fleeing Pursuit
24 Racing
25 Parked Vehicle
26 Driverless Vehicle in Motion

Pedestrian/Pedalcycle Actions

30 Crossing at Painted Intersection
31 Crossing at Unpainted Intersection
35 Crossing at Non-Intersection X-walk
36 Crossing Not at Intersection
40 Walk/Ride with Traffic in Bike Lane
41 Walk/Ride with Traffic No Bike Lane
42 Walk/Ride Facing Traffic in Bike Lane
43 Walk/Ride Facing Traffic No Bike Lane
50 Standing on Roadway
51 Playing on Roadway
52 Working on Roadway
60 Enter/Leave School Bus
70 Not on Roadway
99 Other

IDAHO VEHICLE COLLISION REPORT
ADDITIONAL UNITS

The Additional Units Report was developed to speed the process of reporting by eliminating duplication on collision location information.

--The unit # has been left blank in the driver/vehicle information section and events section to accommodate multiple car collisions. You need to enter the unit # information for each unit involved.
--If there are more than 3 passengers per unit, all additional passenger information should be entered in the narritive section on page 3 of the original VCR.

(I.C. 49-102 (3)) "**Accident**" means any event that results in an unintended injury or property damage attributed directly or indirectly to the motion of a motor vehicle or it's load, a snowmobile or special mobile equipment.

(I.C. 49-1305 (1)) The driver of a vehicle involved in an accident resulting in **injury to or death** of any person, or **damage to the property of any one (1) person in excess of seven hundred and fifty dollars ($750)** shall immediately, by the quickest means of communication give notice of the accident to the local police department if the accident occurs within a city, otherwise to the office of the county sheriff or the nearest office of the state police.

INJURIES

A-Injury -- incapacitating injury which prevents the injured person from walking, driving, or normally continuing the activities the person was capable of performing before the injury occurred. Includes : Severe lacerations, Broken or distorted limbs, skull or chest injuries, unable to leave scene without assistance.

B-injury -- nonincapacitating injury which is evident to observers at the scene. Includes: Lumps, Bumps, bruises, minor lacerations.

C-injury -- possible injury which includes: claim of injuries not evident, limping, complaint of pain, nausea, or hysteria.

PASSENGER SEATING

Seating -- A child riding in a driver's lap or on the gas tank in front of a motorcycle driver should be coded as 99-other and be explained in the narrative section.

Trapped -- This data element is used to determine how frequently extrication units are required to forcibly remove victims from vehicles. If an extrication unit (jaws of life, hearst etc) is used indicate code 2 trapped/extrication unit used. If victims are removed from vehicle by other means (pry bars etc.) indicate 3 Trapped/other extrication method.

Transported -- Transported for medical care should be used to show how injured were transported from the scene. If injured were not transported. fill in the space with a "--" to indicate not applicable.

COMMERCIAL VEHICLE SILHOUETTES

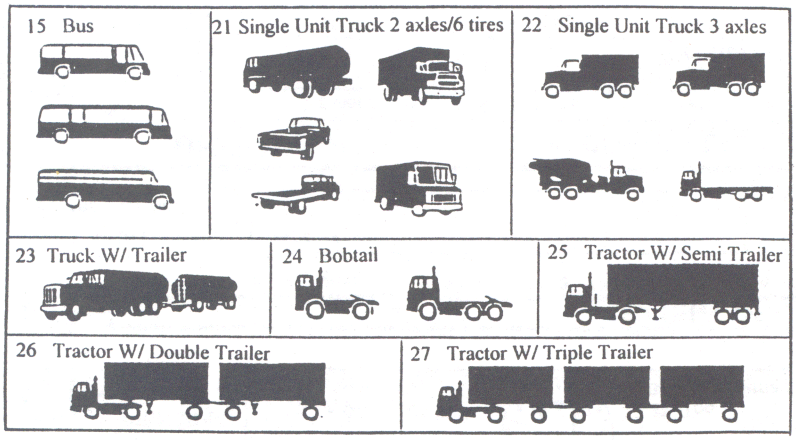

INTERSECTION

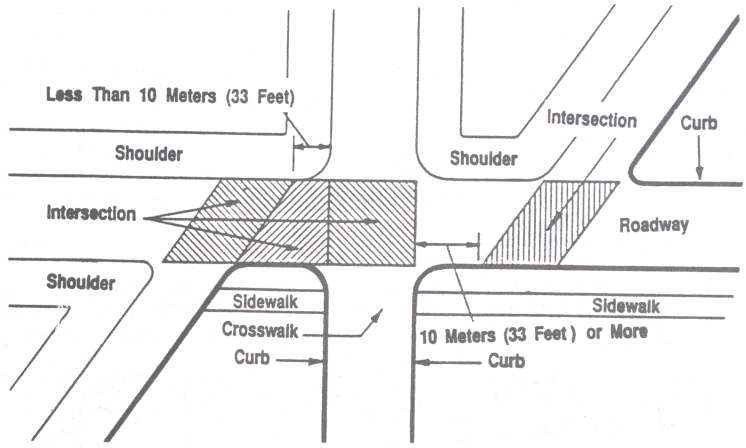

WHEN IN DOUBT 0 = None 9 or 99 = Other "-" = Not Applicable

Event	Unit # of Units Involved		Event Location

EVENTS - List events for ALL units in the order they occurred

Case No.

1 Overturn
2 Separation of Units
3 Cargo Loss/Shift
4 Jack-Knifed
5 Ran off Road
6 Down Hill Runaway
7 Fire/Explosion
8 Gas/Inhalation
9 Other Noncollision
10 Loss of Control
11 Fell/Pushed/Jumped
12 Non-Collision Injury
13 Immersion
71 Came Back on Road
72 Drove L/R of Center

One Veh. Collision With

14 Pedestrian
15 Pedalcycle
16 Railroad Train
17 Domestic Animal
18 Wild Animal
19 Other Object Not Fixed
20 Parked Vehicle on Private Property
21 Impact Attenuator
22 Bridge/Pier/Abutment
23 Bridge Parapet End
24 Bridge Rail
25 Overpass
26 Guardrail Face
27 Guardrail End
28 Median Barrier
30 Highway Traffic Sign Post
31 Overhead Sign support
32 Street Light Support
33 Utility Pole
39 Other Pole
40 Delineator Post
41 Culvert
42 Curb
43 Ditch
44 Embankment
45 Fence
46 Mailbox
47 Tree
48 Building Wall
49 Other Fixed Object

Sideswiped Same 52
Sideswiped Opposite 53
Angle 58

Turning Events

Head-On 54
Angle 59
Rear-End 56
Same Dir 62

50 Head-On
51 Rear-End
60 Backed Into
61 Parked Veh.
99 Other

THE EVENT LOCATION

1 On Roadway
2 Left Shoulder
3 Right Shoulder
4 Roadside (Includes Sidewalk)
5 Outside Right of Way
6 Off Roadway - Loc Unknown
7 Median
8 Gore
9 Other
A In Parking Lot
B Parking Lot Access Road
P Private Property

UNIT # 1 ← **FIRST EVENT RELATIONSHIP TO JUNCTION** → **UNIT # 2**

0 Nonjunction
1 In Intersection
2 Intersection Related
3 At Driveway/Alley
4 Driveway/Alley Related
5 On Ramp
6 Ramp Related
7 At Railroad Crossing
8 Railroad Crossing Related
9 Other

FIRST Harmful Event
MOST Harmful Event
Driver / Ped Action

GENERAL DIRECTION OF TRAVEL (If turning, select direction before turning)

General Direction of Street	Unit Direction	General Direction of Street	Unit Direction
☐ South / North	☐ North ☐ South	☐ South / North	☐ North ☐ South
☐ West / East	☐ East ☐ West	☐ West / East	☐ East ☐ West
On Street		On Street	

FIRST Harmful Event
MOST Harmful Event
Driver / Ped Action

Sketch the scene

Show North by Arrow in Circle

Indicate road names and show all lanes

Not to Scale

Driver Actions

1 Going Straight
2 Turning Right
3 Right Turn on Red
4 Turning Left
5 Left Turn on Red
6 U-Turn
7 Merging
8 Changing Lanes
10 Passing
11 Negotiating Curve
12 Stopped in Traffic
13 Slowing in Traffic
14 Starting in Traffic
15 Parking
16 Entering Drivwy./Alley
17 Leaving Drivwy./Alley
18 Backing
20 Avoiding Obstacle
21 Avoiding Veh./Ped.
22 Pursuing Vehicle
23 Fleeing Pursuit
24 Racing
25 Parked Vehicle
26 Driverless Vehicle in Motion

Pedestrian/Pedalcycle Actions

30 Crossing at Painted Intersection
31 Crossing at Unpainted Intersection
35 Crossing at Non-Intersection X-walk
36 Crossing Not at Intersection
40 Walk/Ride with Traffic in Bike Lane
41 Walk/Ride with Traffic No Bike Lane
42 Walk/Ride Facing Traffic in Bike Lane
43 Walk/Ride Facing Traffic No Bike Lane
50 Standing on Roadway
51 Playing on Roadway
52 Working on Roadway
60 Enter/Leave School Bus
70 Not on Roadway
99 Other

Property Damage (Name of Object Struck - Owner Name and Address)

Estimated Damage $

Narrative / Additional Information / Additional Passengers (indicate unit # and all information for additional passengers)

WITNESSES Name | Address | State | Home Phone | Work Phone

X	Investigating Officer's Name and #	Date of Report	Photos Y ☐ N ☐	Approved By	Date

Send ORIGINAL to: **Office of Highway Safety, P. O. Box 7129, Boise, Idaho 83707-1129**

L1 | L2

IDAHO VEHICLE COLLISION REPORT

(I.C. 49-102 (3)) **"Accident"** means any event that results in an unintended injury or property damage attributed directly or indirectly to the motion of a motor vehicle or it's load, a snowmobile or special mobile equipment.

(I.C. 49-1305 (1)) The driver of a vehicle involved in an accident resulting in **injury to or death** of any person, or **damage to the property of any one (1) person in excess of seven hundred and fifty dollars ($750)** shall immediately, by the quickest means of communication give notice of the accident to the local police department if the accident occurs within a city, otherwise to the office of the county sheriff or the nearest office of the state police.

ACCIDENT LOCATION

# of Lanes	-- Record all travel lanes in both directions. **Include:** Exclusive left- and right-turn lanes and center turn lanes if they are being used legally to start or end a turn, or to merge with traffic. **Exclude:** Center turn lane if not being used for legal travel described above, and parking lanes. **NOTE:** A divided interstate with 2 lanes of travel each way would have a total of 4 lanes.
Milepost	--Ref. Mile Post Marker -- Reference mile post marker -- should refer to the mile post that is referenced. An example would be "250 feet east of Ref. Mile Post Marker 248" --Collision Loc Mile Point -- Collision Location Mile Point -- should refer to the actual mile point of the collision. This can be estimated as 248.2 or can be obtained from the ITD milepost log where available.

INJURIES

A-Injury --	incapacitating injury which prevents the injured person from walking, driving, or normally continuing the activities the person was capable of performing before the injury occurred. Includes : Severe lacerations, Broken or distorted limbs, skull or chest injuries, unable to leave scene without assistance.
B-injury --	nonincapacitating injury which is evident to observers at the scene. Includes: Lumps, Bumps, bruises, minor lacerations.
C-injury --	possible injury which includes: claim of injuries not evident, limping, complaint of pain, nausea, or hysteria.

PASSENGER SEATING

Seating	--A child riding in a driver's lap or on the gas tank in front of a motorcycle driver should be coded as 99-other and be explained in the narrative section.
Trapped	--This data element is used to determine how frequently extrication units are required to forcibly remove victims from vehicles. If an extrication unit (jaws of life, hearst etc) is used indicate code 2 trapped/extrication unit used. If victims are removed from vehicle by other means (pry bars etc.) indicate 3 Trapped/other extrication method.
Transported	--Transported for medical care should be used to show how injured were transported from the scene. If injured were not transported. fill in the space with a "--" to indicate not applicable.

COMMERCIAL VEHICLE SILHOUETTES

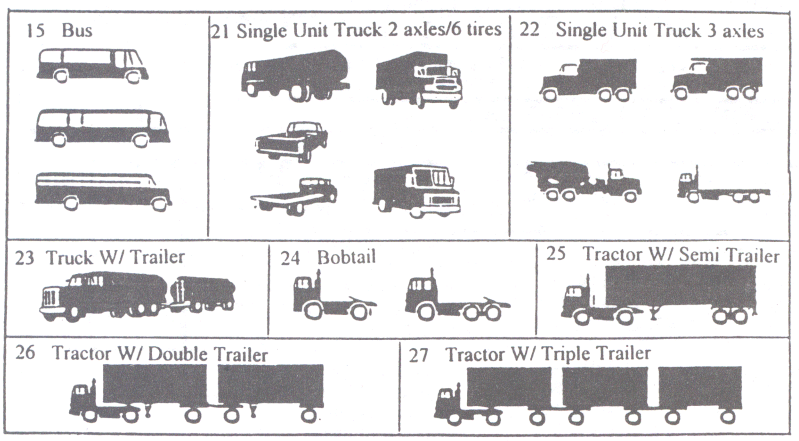

INTERSECTION

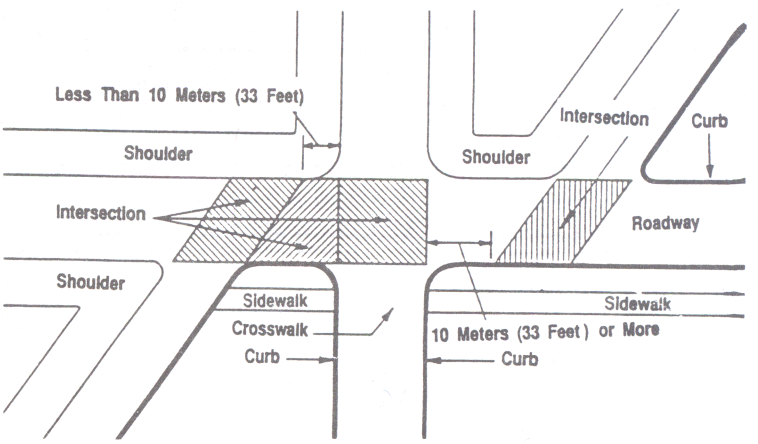

WHEN IN DOUBT 0 = None 9 or 99 = Other "----" = Not Applicable